

ONEIDA COUNTY DEPARTMENT OF PUBLIC WORKS

MOHAWK VALLEY COMMUNITY COLLEGE

SCIENCE & TECHNOLOGY BUILDING

CONSTRUCTION
SEPTEMBER 23, 2025

REGISTERED ARCHITECT
MATTHEW E. LASCH
039779
STATE OF NEW YORK

EXPIRATION DATE: 05-31-2028

THE UNDERSIGNED CERTIFIES THAT TO THE BEST OF THEIR KNOWLEDGE, INFORMATION AND BELIEF, THE PLANS AND SPECIFICATIONS ARE IN ACCORDANCE WITH APPLICABLE REQUIREMENTS OF THE NEW YORK STATE UNIFORM FIRE PREVENTION AND BUILDING CODE, AND THE STATE ENERGY CONSERVATION CONSTRUCTION CODE.

REGISTERED ARCHITECT
JAMES R. BRADDOCK
018801
STATE OF NEW YORK

EXPIRATION DATE: 05-31-2026

BID REFERENCE NO. 2307 & 2361

GENERAL CONSTRUCTION:	CONTRACT NO. H2455701
SITEWORK CONSTRUCTION:	CONTRACT NO. H2455702
ROOFING CONSTRUCTION:	CONTRACT NO. H2455703
FIRE PROTECTION CONSTRUCTION:	CONTRACT NO. H2455704
PLUMBING CONSTRUCTION:	CONTRACT NO. H2455705
MECHANICAL CONSTRUCTION:	CONTRACT NO. H2455706
ELECTRICAL CONSTRUCTION:	CONTRACT NO. H2455707

DRAWING LIST - VOLUME 1:

DRAWING NO.	DRAWING NAME
CODE COMPLIANCE	
CC-101	CODE COMPLIANCE
CC-102	GLAZING PERCENTAGES AND MAPS
EN-101	COMCHECK COMPLIANCE CERTIFICATES & INSPECTION CHECKLIST
EN-102	COMCHECK INSPECTION CHECKLISTS
SITEWORK	
C-100	SITE SURVEY
C-101	STORM WATER POLLUTION PREVENTION PLAN
C-102	SWPPP NOTES
C-103	SITE PREPARATION PLAN
C-104	SITE GRADING PLAN
C-105	SITE UTILITY PLAN
C-106	SITE LAYOUT PLAN
C-107	SITE PLANTING PLAN
C-109	SITE DETAILS
C-110	SITE DETAILS
C-111	PARTIAL UTILITY PLAN
STRUCTURAL	
S-100	FOUNDATION PLAN - OVERALL
S-101	HEAD BUILDING - FOUNDATION PLAN
S-102	SHED BUILDING - FOUNDATION PLAN
S-200	LOW ROOF / SECOND FLOOR / PENTHOUSE FRAMING PLAN - OVERALL
S-201	HEAD BUILDING - LOW ROOF / SECOND FLOOR FRAMING PLAN
S-202	SHED BUILDING - LOW ROOF / PENTHOUSE FLOOR FRAMING PLAN
S-300	HIGH ROOF FRAMING PLAN - OVERALL
S-301	HEAD BUILDING - HIGH ROOF FRAMING PLAN
S-302	SHED BUILDING - HIGH ROOF FRAMING PLAN

DRAWING NO.	DRAWING NAME
S-401	HEAD AND SHED BUILDINGS - TYPICAL FOUNDATION DETAILS AND NOTES
S-402	HEAD BLDG - FOUNDATION SECTIONS
S-403	SHED BLDG - FOUNDATION SECTIONS
S-501	MASONRY DETAILS, LINTEL SCHEDULE AND NOTES
S-601	SHED AND HEAD BUILDING - TYPICAL FRAMING DETAILS, DESIGN PARAMETERS AND NOTES
S-602	SHED BUILDING - TYPICAL MOMENT CONNECTION SECTIONS AND DETAILS
S-603	SHED BUILDING - LOW ROOF, CONNECTING LINK ROOF & PENTHOUSE FRAMING SECTIONS
S-604	SHED BUILDING - HIGH ROOF FRAMING SECTIONS
S-605	HEAD BLDG - CANOPY SECTIONS AND DETAILS
S-606	HEAD BLDG - MAIN LOBBY STAIR SECTIONS AND DETAILS
S-701	SHED BUILDING - STEEL COLUMN SCHEDULE AND DETAILS
S-801	HEAD BUILDING - CFMF DETAILS AND NOTES
S-802	HEAD BUILDING - CFMF SHEAR WALL ELEVATIONS
S-803	HEAD BUILDING - CFMF SHEAR WALL ELEVATIONS
S-804	HEAD BUILDING - CFMF SHEAR WALL ELEVATIONS
S-901	HEAD BUILDING - WOOD FRAMING COLUMN SCHEDULE AND DETAILS
S-901.1	HEAD BUILDING - WOOD FRAMING COLUMN BASE PLATE DETAILS AT X-BRACES
S-902	HEAD BUILDING - WOOD FRAMING SECTIONS AND DETAILS
S-903	HEAD BUILDING - WOOD FRAMING SECTIONS
S-904	HEAD BUILDING - WOOD FRAMING SECTIONS, DESIGN PARAMETERS AND NOTES
S-905	HEAD BUILDING - EXTERIOR WALL X-BRACE ELEVATIONS
S-1001A	COOLING TOWER - ENCLOSURE AND SUPPORT STRUCTURE PLANS
S-1002A	COOLING TOWER - ENCLOSURE AND SUPPORT STRUCTURE SECTIONS AND DETAILS

ONEIDA COUNTY 1798 NEW YORK

MVCC
MOHAWK VALLEY COMMUNITY COLLEGE

1101 SHERMAN DRIVE
UTICA, NY 13501
(315) 792-5400

ARCHITECT:

MA MARCH ASSOCIATES
ARCHITECTS & PLANNERS, PC

258 Genesee Street, Suite 300
Utica, New York 13501
315 733 3344

Mitchell Giurgola

Mitchell Giurgola Architects LLP
630 Ninth Avenue, Suite 711
New York, New York 10036
212 663 4000

STRUCTURAL ENGINEER:
Interactive Engineering Solutions, PC
1721 Black River Blvd, Suite L-1
Rome, NY 13440
315 339 7855

MEP ENGINEER:
Towne Engineering
18 South Street
Utica, NY 13501
315 733 9000

SITE | CIVIL ENGINEER:
Appel Osborne Landscape Architecture
102 West Division Street, Suite 100
Syracuse, NY 13204
315 476 1022

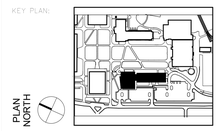
SEAL:

ISSUE/REVISION:

NO.	DATE	COMMENTS

COPYRIGHT © 2025 MITCHELL GIURGOLA ARCHITECTS LLP
ALL DIMENSIONS AND EXISTING CONDITIONS SHALL BE CHECKED AND VERIFIED BY THE CONTRACTOR BEFORE PROCEEDING WITH THE WORK.

KEY PLAN:



PROJECT:

SCIENCE & TECHNOLOGY BUILDING

DRAWING TITLE:

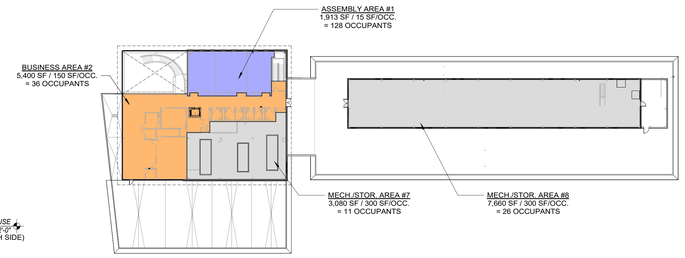
COVER SHEET – VOL. 1

PROJECT NO: 23000 | DATE: 9/23/2025
PHASE: REBID & CONSTRUCTION | SCALE:

T-001

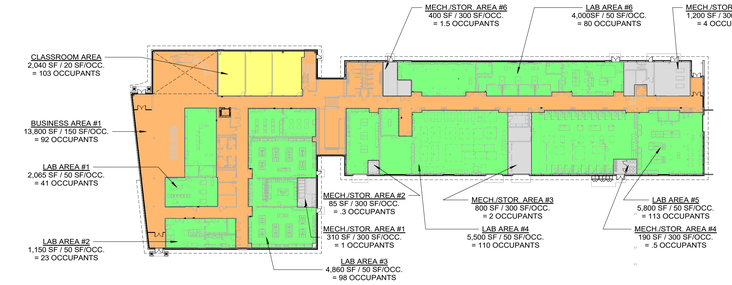
OCCUPANCY LEGEND

	- BUSINESS AREA	-	150 SF PER OCCUPANT
	- MECHANICAL AREA	-	300 SF PER OCCUPANT
	- CLASSROOM AREA	-	20 SF PER OCCUPANT
	- LAB AREA	-	50 SF PER OCCUPANT
	- ASSEMBLY AREA	-	15 SF PER OCCUPANT



4 CODE COMPLIANCE KEY PLAN - SECOND FLOOR

SCALE: 1" = 40'-0"



3 CODE COMPLIANCE KEY PLAN - FIRST FLOOR

SCALE: 1" = 40'-0"

OCCUPANCY ROOM SCHEDULE

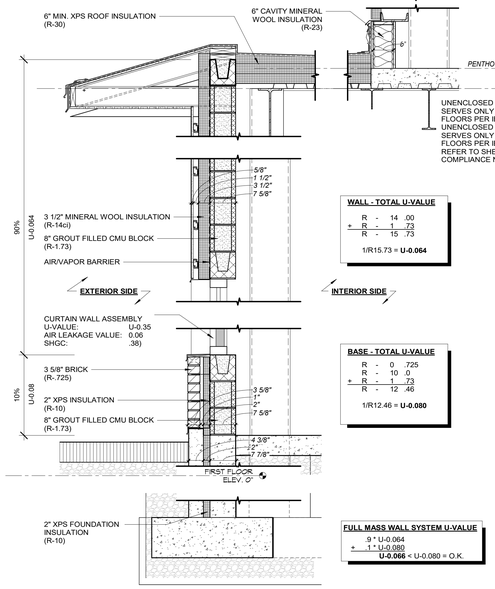
ROOM NAME	ROOM NUMBER	AREA	OCCUPANCY GROUP	OCCUPANT LOAD FACTOR	NUMBER OF OCCUPANTS
FIRST FLOOR HEAD					
CORRIDOR	CC102	947 SF	BUSINESS OCCUPANCY	150 SF/OCC.	6
ADA RAMP	CC104	852 SF	BUSINESS OCCUPANCY	150 SF/OCC.	6
CORRIDOR	CR102	1,414 SF	BUSINESS OCCUPANCY	150 SF/OCC.	10
CORRIDOR	CR103	414 SF	BUSINESS OCCUPANCY	150 SF/OCC.	3
ELEVATOR	E1	45 SF	BUSINESS OCCUPANCY	150 SF/OCC.	1
LOBBY	LL101	1,825 SF	BUSINESS OCCUPANCY	150 SF/OCC.	13
LOUNGE	LL102	286 SF	BUSINESS OCCUPANCY	150 SF/OCC.	2
LOUNGE	LL103	1,290 SF	BUSINESS OCCUPANCY	150 SF/OCC.	9
ELECTRIC	ME102	32 SF	BUSINESS OCCUPANCY	150 SF/OCC.	1
ADA RESTROOM	MR101	62 SF	BUSINESS OCCUPANCY	150 SF/OCC.	1
RESTROOM	MR102	46 SF	BUSINESS OCCUPANCY	150 SF/OCC.	1
RESTROOM	MR103	46 SF	BUSINESS OCCUPANCY	150 SF/OCC.	1
RESTROOM	MR104	46 SF	BUSINESS OCCUPANCY	150 SF/OCC.	1
CHEM-WASTE	ST104	107 SF	BUSINESS OCCUPANCY	150 SF/OCC.	1
OFFICE	ST106	112 SF	BUSINESS OCCUPANCY	150 SF/OCC.	1
STAIR A	STA	1,386 SF	BUSINESS OCCUPANCY	150 SF/OCC.	10
STAIR A	STA	1,386 SF	BUSINESS OCCUPANCY	150 SF/OCC.	10
VESTIBULE / CORRIDOR	VSI/CC100	2,709 SF	BUSINESS OCCUPANCY	150 SF/OCC.	19
		8,920	BUSINESS OCCUPANCY TOTAL		94
AUTOMATION TRAINING CENTER	ST100	980 SF	LAB AREA OCCUPANCY	50 SF/OCC.	20
EXAMINING	ST100A	78 SF	LAB AREA OCCUPANCY	50 SF/OCC.	2
OFFICE	ST100B	104 SF	LAB AREA OCCUPANCY	50 SF/OCC.	2
OFFICE	ST101	104 SF	LAB AREA OCCUPANCY	50 SF/OCC.	3
FAB CELLAB	ST101A	181 SF	LAB AREA OCCUPANCY	50 SF/OCC.	4
POST PROCESS	ST101B	121 SF	LAB AREA OCCUPANCY	50 SF/OCC.	3
METAL PRINT	ST101BA	102 SF	LAB AREA OCCUPANCY	50 SF/OCC.	3
MECHATRONICS ROBOTICS	ST102	847 SF	LAB AREA OCCUPANCY	50 SF/OCC.	17
PREP ROOM/ADMIN	ST103	1,165 SF	LAB AREA OCCUPANCY	50 SF/OCC.	24
PREP ROOM	ST105	401 SF	LAB AREA OCCUPANCY	50 SF/OCC.	9
INSTRUMENT	ST105B	277 SF	LAB AREA OCCUPANCY	50 SF/OCC.	6
ORGANIC CHEMISTRY	ST107	1,476 SF	LAB AREA OCCUPANCY	50 SF/OCC.	30
PRECIPATIC & MICCUPI	ST109	539 SF	LAB AREA OCCUPANCY	50 SF/OCC.	11
ANALYTICAL CHEMISTRY	ST110	1,126 SF	LAB AREA OCCUPANCY	50 SF/OCC.	23
JANITOR'S CLOSET	WC101	69 SF	LAB AREA OCCUPANCY	50 SF/OCC.	1
		7,067	LAB AREA OCCUPANCY TOTAL		141
CLASSROOM	ST115	630 SF	CLASSROOM AREA OCCUPANCY	20 SF/OCC.	32
CLASSROOM	ST112	968 SF	CLASSROOM AREA OCCUPANCY	20 SF/OCC.	49
CLASSROOM	ST114	720 SF	CLASSROOM AREA OCCUPANCY	20 SF/OCC.	37
		2,318	CLASSROOM OCCUPANCY TOTAL		118
CHEM STORAGE	ST100A	276 SF	MECH./STOR. OCCUPANCY	300 SF/OCC.	1
		276	MECH./STOR. OCCUPANCY TOTAL		1
FIRST FLOOR SHED					
CORRIDOR	SR105	2,852 SF	BUSINESS OCCUPANCY	150 SF/OCC.	19
MIN CLST	ME104	24 SF	BUSINESS OCCUPANCY	150 SF/OCC.	1
RESTROOM	MR105	396 SF	BUSINESS OCCUPANCY	150 SF/OCC.	3
RESTROOM	MR106	396 SF	BUSINESS OCCUPANCY	150 SF/OCC.	3
ADA RESTROOM	MR107	49 SF	BUSINESS OCCUPANCY	150 SF/OCC.	1
STAIR	STB	153 SF	BUSINESS OCCUPANCY	150 SF/OCC.	1
VESTIBULE	VSI3	111 SF	BUSINESS OCCUPANCY	150 SF/OCC.	1
		3,704	BUSINESS OCCUPANCY TOTAL		25
CIVIL LAB	ST113	1,001 SF	LAB AREA OCCUPANCY	50 SF/OCC.	21
COLLAB LAB	ST115	271 SF	LAB AREA OCCUPANCY	50 SF/OCC.	6
INDUSTRIAL CONTROLS	ST116	1,300 SF	LAB AREA OCCUPANCY	50 SF/OCC.	26
ELEC LAB	ST117	1,300 SF	LAB AREA OCCUPANCY	50 SF/OCC.	26
ELEC CODES	ST118	918 SF	LAB AREA OCCUPANCY	50 SF/OCC.	19
ROOM 1	ST118A	66 SF	LAB AREA OCCUPANCY	50 SF/OCC.	2
ROOM 2	ST118B	66 SF	LAB AREA OCCUPANCY	50 SF/OCC.	2
ROOM 3	ST118C	66 SF	LAB AREA OCCUPANCY	50 SF/OCC.	2
ROOM 4	ST118D	91 SF	LAB AREA OCCUPANCY	50 SF/OCC.	2
ROOM 5	ST118E	66 SF	LAB AREA OCCUPANCY	50 SF/OCC.	2
ROOM 7	ST118F	66 SF	LAB AREA OCCUPANCY	50 SF/OCC.	2
MATERIAL & CHE LAB	ST119	1,300 SF	LAB AREA OCCUPANCY	50 SF/OCC.	26
MATERIAL TESTING	ST120	490 SF	LAB AREA OCCUPANCY	50 SF/OCC.	10
WELDING LAB	ST121	5,600 SF	LAB AREA OCCUPANCY	50 SF/OCC.	112
MATERIAL PROCESS	ST122	620 SF	LAB AREA OCCUPANCY	50 SF/OCC.	13
HVAC LAB	ST123	2,214 SF	LAB AREA OCCUPANCY	50 SF/OCC.	45
		14,940	LAB AREA OCCUPANCY TOTAL		299
ELEC	ME105	265 SF	MECH./STOR. OCCUPANCY	300 SF/OCC.	1
ELEC	ME106	265 SF	MECH./STOR. OCCUPANCY	300 SF/OCC.	1
BOILER ROOM	ME130	672 SF	MECH./STOR. OCCUPANCY	300 SF/OCC.	3
TOOL STORAGE	ST113A	76 SF	MECH./STOR. OCCUPANCY	300 SF/OCC.	1
MACHINE TOOL STORAGE	ST113B	156 SF	MECH./STOR. OCCUPANCY	300 SF/OCC.	1
WELDING TOOL STORAGE	ST121A	391 SF	MECH./STOR. OCCUPANCY	300 SF/OCC.	2
GAS STORAGE	ST121B	174 SF	MECH./STOR. OCCUPANCY	300 SF/OCC.	1
GAS STORAGE	ST121C	174 SF	MECH./STOR. OCCUPANCY	300 SF/OCC.	1
PANEL CLOSET	ST121D	9 SF	MECH./STOR. OCCUPANCY	300 SF/OCC.	0
BUILDING STORAGE	ST124	150 SF	MECH./STOR. OCCUPANCY	300 SF/OCC.	1
STO-WASTE	ST126	81 SF	MECH./STOR. OCCUPANCY	300 SF/OCC.	1
		2,208	MECH./STOR. OCCUPANCY TOTAL		12
SECOND FLOOR HEAD					
CLEANER	E1	45 SF	BUSINESS OCCUPANCY	150 SF/OCC.	1
TERRACE	LL201	731 SF	BUSINESS OCCUPANCY	150 SF/OCC.	5
CONFERENCE	LL201/202	1,332 SF	BUSINESS OCCUPANCY	150 SF/OCC.	9
PANTRY	SC201	122 SF	BUSINESS OCCUPANCY	150 SF/OCC.	1
BREAKOUT	ST204	54 SF	BUSINESS OCCUPANCY	150 SF/OCC.	1
BREAKOUT	ST206	56 SF	BUSINESS OCCUPANCY	150 SF/OCC.	1
MEETING ROOM	ST205	704 SF	BUSINESS OCCUPANCY	150 SF/OCC.	5
ADA RESTROOM	MR200	49 SF	BUSINESS OCCUPANCY	150 SF/OCC.	1
ADA RESTROOM	MR201	65 SF	BUSINESS OCCUPANCY	150 SF/OCC.	1
ADA RESTROOM	MR202	65 SF	BUSINESS OCCUPANCY	150 SF/OCC.	1
RESTROOM	MR203	49 SF	BUSINESS OCCUPANCY	150 SF/OCC.	1
RESTROOM	MR204	49 SF	BUSINESS OCCUPANCY	150 SF/OCC.	1
RESTROOM	MR205	49 SF	BUSINESS OCCUPANCY	150 SF/OCC.	1
ADA RESTROOM	MR206	65 SF	BUSINESS OCCUPANCY	150 SF/OCC.	1
		4,486	BUSINESS OCCUPANCY TOTAL		30
COLLABORATION SPACE	ST202	1,853 SF	ASSEMBLY OCCUPANCY TOTAL	15 SF/OCC.	124
		1,853	ASSEMBLY OCCUPANCY TOTAL		124
MECHANICAL	ME202	2,069 SF	MECH./STOR. OCCUPANCY	300 SF/OCC.	7
STORAGE	ST206	166 SF	MECH./STOR. OCCUPANCY	300 SF/OCC.	1
		2,235	MECH./STOR. OCCUPANCY TOTAL		8
PENTHOUSE LEVEL SHED					
MECHANICAL PENTHOUSE	ME200	1,660 SF	MECH./STOR. OCCUPANCY	300 SF/OCC.	6
		1,660	MECH./STOR. OCCUPANCY TOTAL		6

OCCUPANCY ANALYSIS TOTALS - ALTERNATE

FIRST FLOOR: (669 OCCUPANTS)
(B OCCUPANCY)
= 92 OCC. (BUSINESS AREA)
= 103 OCC. (CLASS AREA)
= 465 OCC. (LAB AREA)
+ = 9 OCC. (MECH./STOR. AREA)
= 669 OCCUPANTS

SECOND FLOOR: (201 OCCUPANTS)
(B OCCUPANCY)
= 36 OCC. (BUSINESS AREA)
= 128 OCC. (ASSEMBLY AREA)
+ = 37 OCC. (MECH./STOR. AREA)
= 201 OCCUPANTS

TOTAL FIRST FLOOR OCCUPANTS: = 669 OCCUPANTS
TOTAL SECOND FLOOR OCCUPANTS = 201 OCCUPANTS
TOTAL BUILDING OCCUPANTS: = 870 OCCUPANTS



WALL - TOTAL U-VALUE

R - 14 .00
+ R - 1 .73
R - 15 .73

1/R15.73 = **U-0.064**

BASE - TOTAL U-VALUE

R - 0 .725
R - 10 .0
+ R - 1 .73
R - 12 .46

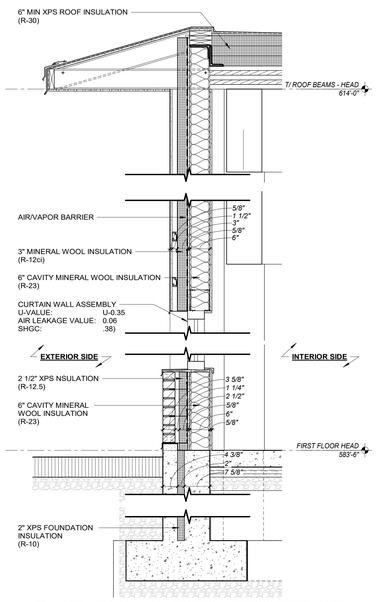
1/R12.46 = **U-0.080**

FULL MASS WALL SYSTEM U-VALUE

.9 * U-0.064
+ .1 * U-0.080
U-0.066 < U-0.080 = O.K.

6 SHED & PENTHOUSE - TYPICAL WALL SECTION - ENERGY COMPLIANCE

SCALE: 3/4" = 1'-0"



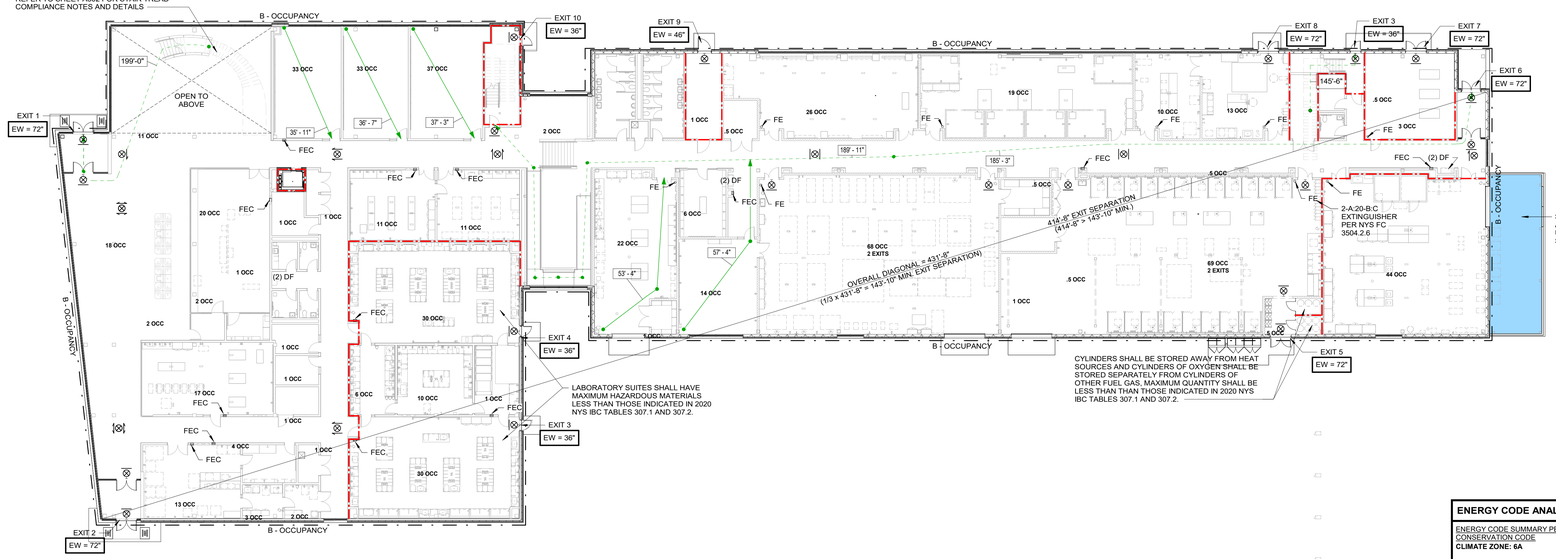
5 HEAD - TYPICAL WALL SECTION - ENERGY COMPLIANCE

SCALE: 3/4" = 1'-0"

2 CODE COMPLIANCE PLAN - SECOND FLOOR

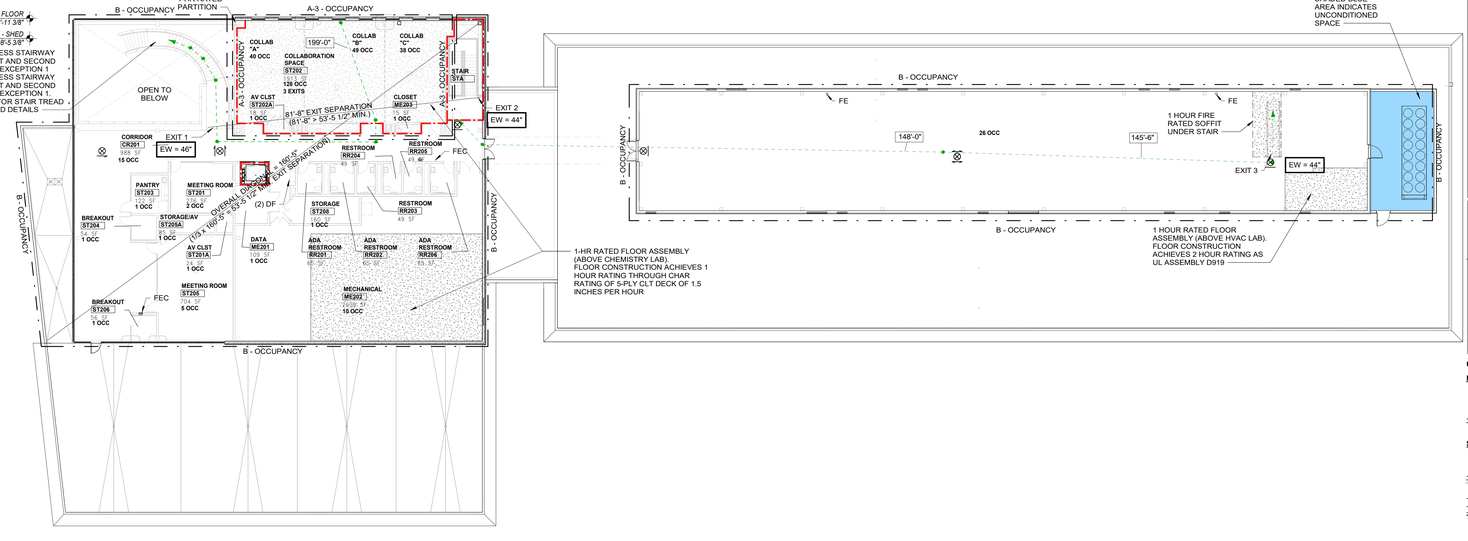
SCALE: 1/16" = 1'-0"

UNENCLOSED EXIT ACCESS STAIRWAY SERVES ONLY THE FIRST AND SECOND FLOORS PER IBC 1019.3 EXCEPTION 1. REFER TO SHEET A502 FOR STAIR TREAD COMPLIANCE NOTES AND DETAILS



1 CODE COMPLIANCE PLAN - FIRST FLOOR

SCALE: 1/16" = 1'-0"



CODE COMPLIANCE - 2 STORY HIGHER EDUCATION FACILITY (SPRINKLERED)

BUILDING HEIGHT & AREA ANALYSIS

OCCUPANCY CLASSIFICATION: MIXED-USE - SEPERATED - B & A-3

TYPE OF CONSTRUCTION: III-B (SECTION 602.3)

BUILDING HEIGHT: (SECTION 504, TABLE 504.3; TABLE 504.4)

	HEIGHT	NO. STORIES
PERMITTED:	75 FEET	2 STORIES (BASED OFF MORE RESTRICTIVE A-3)
ACTUAL:	36 FEET	2 STORIES

ALLOWABLE BUILDING AREA: (NYS IBC SECTION 506, TABLE 506.2) - B OCCUPANCY - 57,000 SF PER STORY; A-3 OCCUPANCY - 28,500 SF PER STORY

SEP. MIXED USE BUILDING AREA AS CALCULATED PER NYS IBC 508.4.2:

	B		A-3		
1ST STORY:	42,620 SF/57,000 SF	+	0SF/35,625 SF	= .75 < 1	
2ND STORY:	18,043 SF/57,000 SF	+	2,050 SF/28,500 SF	= .39 < 1	

NO. SIDES ACCESSIBLE: 4

TRAVEL DISTANCES BY OCCUPANCY CLASSIFICATION

B OCCUPANCY TRAVEL DISTANCES:
MAXIMUM EXIT ACCESS TRAVEL DISTANCE ALLOWED: 300 FEET
MAXIMUM TRAVEL DISTANCE TO FIRE EXTINGUISHER: 75 FEET
MAXIMUM COMMON PATH OF EGRESS: 100 FEET
MAXIMUM DEAD END CORRIDOR: 50 FEET

A-3 OCCUPANCY TRAVEL DISTANCES:
MAXIMUM EXIT ACCESS TRAVEL DISTANCE ALLOWED: 250 FEET
MAXIMUM TRAVEL DISTANCE TO FIRE EXTINGUISHER: 75 FEET
MAXIMUM COMMON PATH OF EGRESS: 75 FEET
MAXIMUM DEAD END CORRIDOR: 20 FEET

CODE ANALYSIS SYMBOLS

TRAVEL DISTANCE (FEET) AND PRIMARY PATH OF EGRESS — 100' - 0"
COMMON PATH OF EGRESS (FEET) — 100' - 0"
FIRE EXTINGUISHER CABINET — FEC
EXIT SIGN LIGHT FIXTURES
EGRESS WIDTH — EW = 54"
REPRESENTS 1-HR FIRE BARRIER
REPRESENTS 1-HR RATED FLOOR

EGRESS ANALYSIS

MINIMUM NUMBER OF EXITS:
PER TABLE 1006.2, SPACES WITH OVER 49 OCCUPANTS REQUIRE 2 EXITS

FIRST FLOOR:
B OCCUPANCY - 669 OCCUPANTS
(INCLUDES MECH./STOR./CLASS./LAB AREAS)

MIN. REQUIRED	PROVIDED
2 EXITS	10 EXITS

SECOND FLOOR:
B OCCUPANCY - 73 OCCUPANTS
(INCLUDES MECH./STOR. AREAS)

MIN. REQUIRED	PROVIDED
2 EXITS	2 EXITS

A-3 OCCUPANCY - 128 OCCUPANTS

MIN. REQUIRED	PROVIDED
2 EXITS	3 EXITS

MINIMUM EXIT STAIRWAY WIDTH BASED ON OCCUPANT LOAD:

MIN. REQUIRED	PROVIDED
.201 OCCUPANTS * .3"/OCC = 60.3"	46" + 44" = 90"

MIN. EXIT WIDTHS BASED ON TOTAL FIRST FLOOR OCCUPANT LOAD:

MIN. REQUIRED	PROVIDED
669 OCCUPANTS * .2"/OCC = 133.8"	72" + 72" + 36" + 36" + 72" + 72" + 72" + 72" + 46" + 36" = 586"

MINIMUM EXIT SEPARATION DISTANCE (FIRST FLOOR):
SEPARATION DISTANCE = 1/3 x LENGTH OF MAX. OVERALL DIAGONAL
= 1/3 x 431'-8" = **143'-10" MIN.**
ACTUAL = **414'-8"**

EGRESS ANALYSIS CONTINUED

MINIMUM EXIT SEPARATION DISTANCE (SECOND FLOOR):
SEPARATION DISTANCE = 1/3 x LENGTH OF MAX. OVERALL DIAGONAL
= 1/3 x 160'-0" = **53'- 5 1/2" MIN.**
ACTUAL = **81'-8"**

PLUMBING FIXTURE COUNTS

B OCCUPANCY - 742 OCCUPANTS
(INCLUDES MECH./STOR./CLASS./LAB AREAS)
(371 OCC. FOR MEN & WOMEN WATER CLOSET CALCULATIONS)
(NYS PC CHAPTER 4, SECTION 403.1.1)

1 MEN'S WATER CLOSET PER 25 OCCUPANTS FOR FIRST 50 OCCUPANTS AND AND 1 MEN'S WATER CLOSET PER 50 OCCUPANTS FOR REMAINING OCCUPANTS — REQUIRED: 8.42

1 WOMEN'S WATER CLOSET PER 25 OCCUPANTS FOR FIRST 50 OCCUPANTS AND AND 1 WOMEN'S WATER CLOSET PER 50 OCCUPANTS FOR REMAINING OCCUPANTS — REQUIRED: 8.42

1 LAVATORY PER 40 OCCUPANTS FOR THE FIRST 80 OCCUPANTS AND 1 LAVATORY PER 80 OCCUPANTS FOR THE REMAINING OCCUPANTS — REQUIRED: 10.275

1 DRINKING FOUNTAIN REQUIRED PER 100 OCCUPANTS — REQUIRED: 7.42

1 SERVICE SINK REQUIRED — REQUIRED: 1

PLUMBING FIXTURE COUNTS CONTINUED

A-3 OCCUPANCY - 128 OCCUPANTS
(INCLUDES MECH./STOR./CLASS./LAB AREAS)
(64 OCC. FOR MEN & WOMEN WATER CLOSET CALCULATIONS)

1 MEN'S WATER CLOSET PER 125 OCCUPANTS — REQUIRED: .512

1 WOMEN'S WATER CLOSET PER 200 OCCUPANTS — REQUIRED: .32

1 LAVATORY PER 200 OCCUPANTS — REQUIRED: .64

1 DRINKING FOUNTAIN PER 500 OCCUPANTS — REQUIRED: .256

1 SERVICE SINK REQUIRED — REQUIRED: 1

TOTAL PLUMBING FIXTURE COUNTS

TOTAL MEN'S WATER CLOSETS: 8.42 + .512 = 8.932 = 9	REQUIRED:	9
	PROVIDED:	11
TOTAL WOMEN'S WATER CLOSETS: 8.42 + .32 = 8.74 = 9	REQUIRED:	9
	PROVIDED:	10
TOTAL LAVATORIES: 10.275 + .64 = 10.915 = 11	REQUIRED:	11
	PROVIDED:	18
TOTAL DRINKING FOUNTAINS: 7.42 + .256 = 7.676 = 8	REQUIRED:	8
	PROVIDED:	8
TOTAL SERVICE SINKS: (2 SHARED)	REQUIRED:	1
	PROVIDED:	1

FIRE PROTECTION

FIRE EXTINGUISHERS - PROVIDED THROUGHOUT SO THAT OCCUPANT IS WITHIN 75' OF AN EXTINGUISHER AT ALL TIMES.

PORTABLE FIRE EXTINGUISHER PROVIDED IN ALL LABORATORY SPACES PER NYS BC 906.1.6. REFER TO PLAN FOR ADDITIONAL EXTINGUISHER REQUIREMENTS

FIRE ALARM - PROVIDED THROUGHOUT BUILDING

SMOKE/HEAT DETECTORS - PROVIDED THROUGHOUT BUILDING

TWO-WAY COMMUNICATION - PROVIDED AT ALL SECOND FLOOR ELEVATOR LANDINGS

APPLICABLE CODES

2020 BUILDING CODE OF NEW YORK STATE

2020 EXISTING BUILDING CODE OF NEW YORK STATE

2020 FIRE CODE OF NEW YORK STATE

ICC/ANSI A117.1 - 2009 ACCESSIBLE AND USABLE BUILDINGS AND FACILITIES

2018 NFPA LIFE SAFETY CODE (NFPA 101)

2017 NFPA 70 - NATIONAL ELECTRICAL CODE

2016 NFPA 72 - NATIONAL FIRE ALARM AND SIGNALING CODE

2020 ENERGY CONSERVATION CONSTRUCTION CODE OF NEW YORK STATE

ENERGY CODE ANALYSIS

ENERGY CODE SUMMARY PER THE 2020 NEW YORK STATE ENERGY CONSERVATION CODE
CLIMATE ZONE: 6A

	REQUIRED	PROVIDED
ROOF:		
INSULATED ABOVE DECK:	R-30ci, U-0.032	R-30ci
WALLS (ABOVE GRADE):		
WOOD FRAMED: (HEAD BUILDING)	R-20 + 3.8ci, U-0.051	R-23 + 12ci
MASS WALLS: (SHED BUILDING)	R-13.3ci, U-0.080	R-14ci
METAL BUILDING (PENTHOUSE)	R-13 + 13ci, U-0.052	U-0.045
SLAB-ON-GRADE FLOORS:		
UNHEATED SLABS:	R-10 FOR 24" BELOW	R-10
OPAQUE DOORS:		
SWINGING DOORS:	U-0.37	U-0.31
NON-SWINGING DOORS:	U-0.31	U-0.19
FENESTRATION:		
FIXED WINDOWS:	U-0.36	U-0.35
OPERABLE WINDOWS	U-0.43	-
ENTRANCE DOORS:	U-0.77	U-0.66
SHGC:	0.40	0.38

AIR BARRIER MEANS & METHODS:
INSTALL CONTINUOUS AIRTIGHT BARRIER OVER SURFACES INDICATED, WITH SEALED SEAMS AND WITH SEALED JOINTS TO ADJACENT SURFACES. APPLY SEALANTS AND ADHESIVES WITHIN RECOMMENDED TEMPERATURE RANGE IN ACCORDANCE WITH MANUFACTURER'S INSTALLATION INSTRUCTIONS. PREPARE SUBSTRATE IN ACCORDANCE WITH MANUFACTURER'S INSTALLATION INSTRUCTIONS; TREAT JOINTS IN SUBSTRATE AND BETWEEN DISSIMILAR MATERIALS AS INDICATED. WHERE EXTERIOR MASONRY VENEER IS BEING INSTALLED, INSTALL MASONRY ANCHORS BEFORE INSTALLING AIR BARRIER OVER MASONRY; PROVIDE AIRTIGHT SEAL AROUND ANCHORS. APPLY BEAD OR TROWEL COAT OF MASTIC SEALANT WITH MINIMUM THICKNESS OF 1/4 INCH ALONG COATING SEAMS, ROUGH CUTS, AND AS RECOMMENDED BY MANUFACTURER. USE FLASHING TO SEAL TO ADJACENT CONSTRUCTION AND TO BRIDGE JOINTS IN COATING SUBSTRATE.

ONEIDA COUNTY 1798 NEW YORK

MVCC MOHAWK VALLEY COMMUNITY COLLEGE

1101 SHERMAN DRIVE
UTICA, NY 13501
(315) 792-5400

ARCHITECT:

MARCH ASSOCIATES ARCHITECTS & PLANNERS, PC
258 Genesee Street, Suite 300
Utica, New York 13501
315 733 3344

Mitchell Giurgola
Mitchell Giurgola Architects LLP
630 Ninth Avenue, Suite 711
New York, New York 10036
212 663 4000

STRUCTURAL ENGINEER:
Interactive Engineering Solutions, PC
1721 Black River Blvd, Suite L-1
Rome, NY 13440
315 339 7855

MEP ENGINEER:
Towne Engineering
18 South Street
Utica, NY 13501
315 733 9000

SITE | CIVIL ENGINEER:
Appel Osborne Landscape Architecture
102 West Division Street, Suite 100
Syracuse, NY 13204
315 476 1022

SEAL:

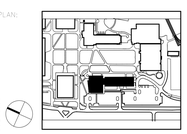
REGISTERED ARCHITECT MATTHEW E. YAGER 039779 STATE OF NEW YORK

EXPIRATION DATE: 05-31-2028

ISSUE/REVISION:	
NO.	DATE / COMMENTS
	9/23/25 REBID & CONSTRUCTION

© THE MITCHELL GIURGOLA ARCHITECTS LLP
ALL DIMENSIONS AND EXISTING CONDITIONS SHALL BE CHECKED AND VERIFIED BY THE CONTRACTOR BEFORE PROCEEDING WITH THE WORK.

KEY PLAN:



PLAN NORTH

PROJECT:

SCIENCE & TECHNOLOGY BUILDING

DRAWING TITLE:

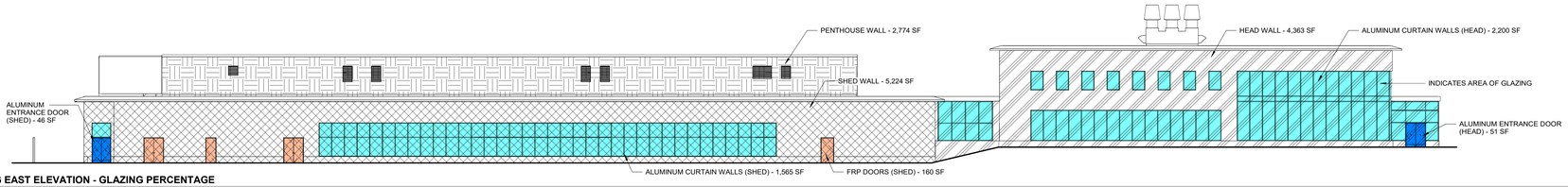
CODE COMPLIANCE

PROJECT NO: 23000	DATE: 9/23/2025
PHASE: REBID & CONSTRUCTION	SCALE: As Indicated

CC-101

AREA TOTALS - EAST ELEVATION

HEAD BUILDING		
HEAD WALL TOTAL AREA -	4,363	SF
ALUMINUM CURTAIN WALL TOTAL AREA -	2,200	SF
ALUMINUM ENTRANCE DOOR TOTAL AREA -	51	SF
SHED BUILDING		
SHED WALL TOTAL AREA -	5,224	SF
ALUMINUM CURTAIN WALL TOTAL AREA -	1,565	SF
ALUMINUM ENTRANCE DOOR TOTAL AREA -	46	SF
PENTHOUSE		
PENTHOUSE WALL TOTAL AREA -	2,774	SF

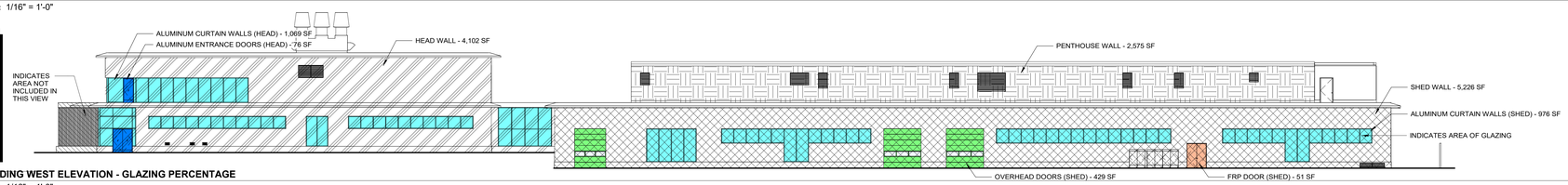


1 BUILDING EAST ELEVATION - GLAZING PERCENTAGE
SCALE: 1/16" = 1'-0"

SQUARE FOOTAGES		
3,862 SF	-	AREA OF GLAZING
8,499 SF	-	AREA OF OPAQUE WALLS & DOORS
12,361 SF	-	TOTAL WALL AREA

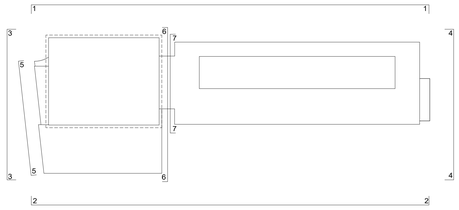
AREA TOTALS - WEST ELEVATION

HEAD BUILDING		
HEAD WALL TOTAL AREA -	4,102	SF
ALUMINUM CURTAIN WALL TOTAL AREA -	1,069	SF
ALUMINUM ENTRANCE DOOR TOTAL AREA -	76	SF
SHED BUILDING		
SHED WALL TOTAL AREA -	5,226	SF
ALUMINUM CURTAIN WALL TOTAL AREA -	976	SF
FRP DOOR TOTAL AREA -	51	SF
OVERHEAD DOOR TOTAL AREA -	429	SF
PENTHOUSE		
PENTHOUSE WALL TOTAL AREA -	2,575	SF

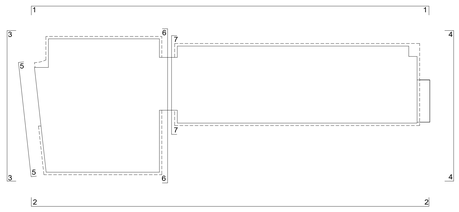


2 BUILDING WEST ELEVATION - GLAZING PERCENTAGE
SCALE: 1/16" = 1'-0"

SQUARE FOOTAGES		
2,121 SF	-	AREA OF GLAZING
9,782 SF	-	AREA OF OPAQUE WALLS & DOORS
11,903 SF	-	TOTAL WALL AREA



8 SECOND FLOOR - ELEVATION KEY PLAN
SCALE: 1" = 60'-0"



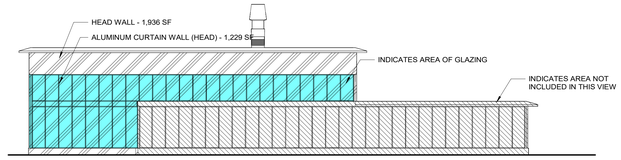
9 FIRST FLOOR - ELEVATION KEY PLAN
SCALE: 1" = 60'-0"

AREA TOTALS - NORTH ELEVATION

HEAD BUILDING		
HEAD WALL TOTAL AREA - (1,936 + 1,689) =	3,625	SF
ALUMINUM CURTAIN WALL TOTAL AREA - (1,229 + 1,455) =	1,069	SF
ALUMINUM ENTRANCE DOOR TOTAL AREA -	76	SF
SHED BUILDING		
SHED WALL TOTAL AREA -	515	SF
PENTHOUSE		
PENTHOUSE WALL TOTAL AREA -	455	SF
FRP DOOR TOTAL AREA -	50	SF

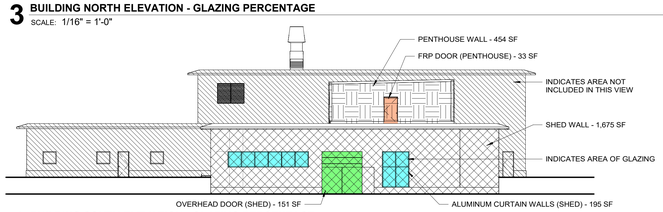
AREA TOTALS - SOUTH ELEVATION

HEAD BUILDING		
HEAD WALL TOTAL AREA -	2,770	SF
ALUMINUM CURTAIN WALL TOTAL AREA -	111	SF
ALUMINUM ENTRANCE DOOR TOTAL AREA -	30	SF
FRP DOOR TOTAL AREA -	103	SF
SHED BUILDING		
SHED WALL TOTAL AREA -	1,675	SF
ALUMINUM CURTAIN WALL TOTAL AREA -	195	SF
OVERHEAD DOOR TOTAL AREA -	151	SF
PENTHOUSE		
PENTHOUSE WALL TOTAL AREA -	454	SF
FRP DOOR TOTAL AREA -	33	SF



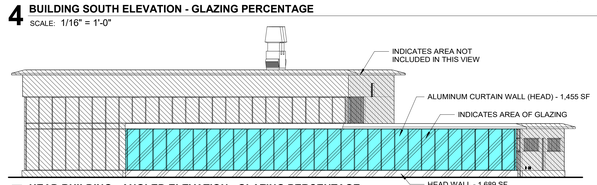
3 BUILDING NORTH ELEVATION - GLAZING PERCENTAGE
SCALE: 1/16" = 1'-0"

SQUARE FOOTAGES		
1,229 SF	-	AREA OF GLAZING
707 SF	-	AREA OF OPAQUE WALLS & DOORS
1,936 SF	-	TOTAL WALL AREA



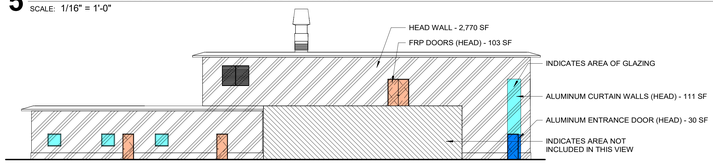
4 BUILDING SOUTH ELEVATION - GLAZING PERCENTAGE
SCALE: 1/16" = 1'-0"

SQUARE FOOTAGES		
195 SF	-	AREA OF GLAZING
1,934 SF	-	AREA OF OPAQUE WALLS & DOORS
2,129 SF	-	TOTAL WALL AREA



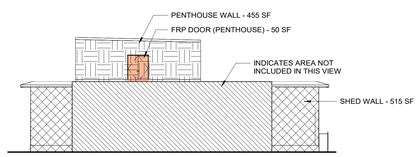
5 HEAD BUILDING - ANGLED ELEVATION - GLAZING PERCENTAGE
SCALE: 1/16" = 1'-0"

SQUARE FOOTAGES		
1,455 SF	-	AREA OF GLAZING
234 SF	-	AREA OF OPAQUE WALLS & DOORS
1,689 SF	-	TOTAL WALL AREA



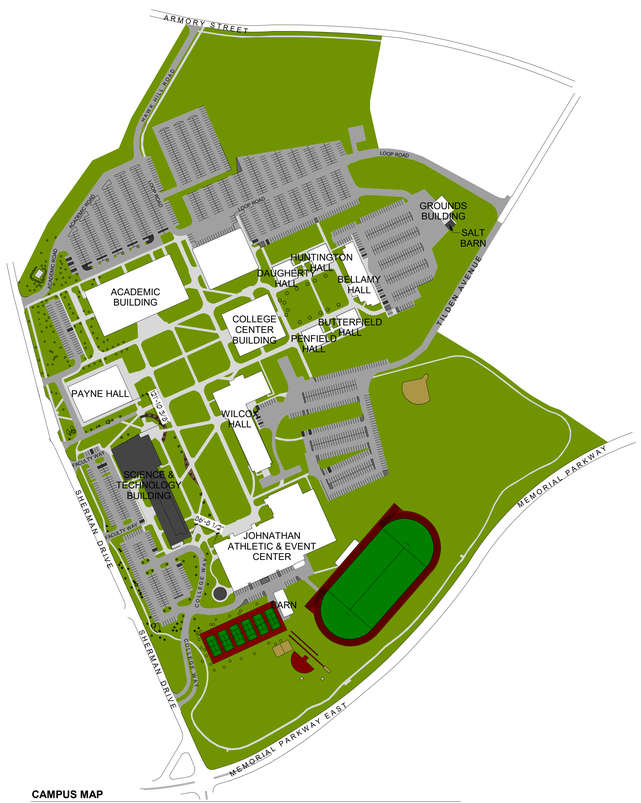
6 HEAD BUILDING - SOUTH ELEVATION - GLAZING PERCENTAGE
SCALE: 1/16" = 1'-0"

SQUARE FOOTAGES		
141 SF	-	AREA OF GLAZING
2,629 SF	-	AREA OF OPAQUE WALLS & DOORS
2,770 SF	-	TOTAL WALL AREA

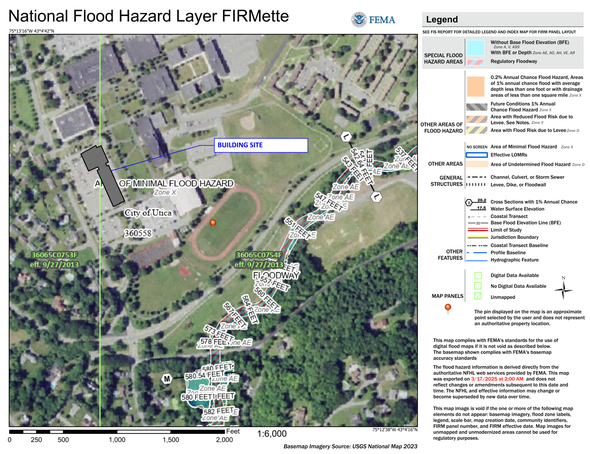


7 SHED BUILDING - NORTH ELEVATION - GLAZING PERCENTAGE
SCALE: 1/16" = 1'-0"

SQUARE FOOTAGES		
0 SF	-	AREA OF GLAZING
970 SF	-	AREA OF OPAQUE WALLS & DOORS
970 SF	-	TOTAL WALL AREA



CAMPUS MAP
SCALE: 1" = 200'-0" NOT TO SCALE



ELEVATION LEGEND
- HEAD WALL (R-23 CAVITY INSULATION, R-12 CONTINUOUS INSULATION)
- SHED WALL (R-13 CONTINUOUS INSULATION)
- PENTHOUSE WALL (U-0.052)
- ALUMINUM CURTAIN WALL (U-0.35)
- ALUMINUM ENTRANCE DOOR (U-0.66)
- FRP DOOR (U-0.31)
- OVERHEAD DOOR (U-0.19)

TOTAL AREAS & PERCENTAGES

AREA OF GLAZING		AREA OF OPAQUE WALLS & DOORS
3,862 SF		8,499 SF
2,121 SF		9,782 SF
1,229 SF		707 SF
195 SF		1,934 SF
1,455 SF		234 SF
141 SF		2,629 SF
+ 0 SF		+ 970 SF
9,003 SF	+	**24,755 SF** = **33,758 TOTAL WALL AREA**
27% GLAZING		**73% OPAQUE**

ONEIDA COUNTY NEW YORK 1798

MVCC
MOHAWK VALLEY COMMUNITY COLLEGE
1101 SHERMAN DRIVE
UTICA, NY 13501
(315) 792-5400

ARCHITECT:
MARCH ASSOCIATES ARCHITECTS & PLANNERS, PC
258 Genesee Street, Suite 300
Utica, New York 13501
315 733 3344

Mitchell Giurgola
Mitchell Giurgola Architects LLP
630 Ninth Avenue, Suite 711
New York, New York 10036
212 663 4000

STRUCTURAL ENGINEER:
Interactive Engineering Solutions, PC
1721 Black River Blvd, Suite L-1
Rome, NY 13440
315 339 7855

MEP ENGINEER:
Towne Engineering
18 South Street
Utica, NY 13501
315 733 9000

SITE | CIVIL ENGINEER:
Appel Osborne Landscape Architecture
102 West Division Street, Suite 100
Syracuse, NY 13204
315 476 1022

SEAL:
REGISTERED ARCHITECT MATTHEW E. YAGER 039779 STATE OF NEW YORK
EXPIRATION DATE: 05-31-2028

ISSUE/REVISION:

NO.	DATE	COMMENTS
1	9/23/25	REBID & CONSTRUCTION

ALL DIMENSIONS AND EXISTING CONDITIONS SHALL BE CHECKED AND VERIFIED BY THE CONTRACTOR BEFORE PROCEEDING WITH THE WORK.

KEY PLAN:
PLAN NORTH

PROJECT:
SCIENCE & TECHNOLOGY BUILDING

DRAWING TITLE:
GLAZING PERCENTAGES AND MAPS

PROJECT NO: 23000 | DATE: 9/23/2025
PHASE: REBID & CONSTRUCTION | SCALE: As indicated

CC-102

COMcheck Software Version COMcheckWeb

Envelope Compliance Certificate

Project Information

Energy Code: 2020 New York State Energy Conservation Construction Code
Project Title: MVCC SandT
Location: Utica, New York
Climate Zone: 6a
Project Type: New Construction
Vertical Glazing / Wall Area: 27%

Construction Site: Owner/Agent: Designer/Contractor:

Additional Efficiency Package(s)

Credits: 1.0 Required 1.0 Proposed
Reduced Lighting Power, 1.0 credit

Building Area	Floor Area
1-Whole Building (School/University) : Nonresidential	61945

Envelope Assemblies

Assembly	Gross Area or Perimeter	Cavity R-Value	Cont. R-Value	Proposed U-Factor	Budget U-Factor[a]
Roof: Insulation Entirely Above Deck, [Bldg. Use 1 - Whole Building]	43064	---	30.0	0.032	0.032
Floor: Unheated Slab-On-Grade, Vertical 3 ft., [Bldg. Use 1 - Whole Building] (d)	1195	---	10.0	0.510	0.540
NORTH					
Shed Wall - 6/CC101: Concrete Block, Bln., Solid Grouted, Normal Density, Furring: Metal, [Bldg. Use 1 - Whole Building]	515	0.0	13.0	0.063	0.080
Penthouse Wall - 6/CC101: Other Steel Framed Wall, [Bldg. Use 1 - Whole Building] (b)	455	---	---	0.052	0.064
FRP Door - A903: Insulated Metal, Swinging, [Bldg. Use 1 - Whole Building]	50	---	---	0.310	0.370
Head Wall - 5/CC101: Steel-Framed, 16in. o.c., [Bldg. Use 1 - Whole Building]	3625	23.0	12.0	0.045	0.064
Aluminum Curtainwall - A303: Metal Frame with Thermal Break: Fixed, Perf. Specs.: Product ID EFCO 5600XTherm, SHGC 0.38, [Bldg. Use 1 - Whole Building] (c)	2684	---	---	0.350	0.360
EAST					
Penthouse Wall - 6/CC101: Other Steel Framed Wall, [Bldg. Use 1 - Whole Building] (b)	2774	---	---	0.052	0.064
Shed Wall - 6/CC101: Concrete Block, Bln., Solid Grouted, Normal Density, Furring: Metal, [Bldg. Use 1 - Whole Building]	5224	0.0	13.0	0.063	0.080
Aluminum Curtainwall - A303: Metal Frame with Thermal Break: Fixed, Perf. Specs.: Product ID EFCO 5600XTherm, SHGC 0.38, [Bldg. Use 1 - Whole Building] (c)	1565	---	---	0.350	0.360
Aluminum Entrance Door - A903: Glass (over 50% glazing): Metal Frame, Entrance Door, Perf. Specs.: Product ID EFCO D202, SHGC 0.38, [Bldg. Use 1 - Whole Building] (c)	46	---	---	0.660	0.770
FRP Door - A903: Insulated Metal, Swinging, [Bldg. Use 1 - Whole Building]	160	---	---	0.310	0.370

Assembly	Gross Area or Perimeter	Cavity R-Value	Cont. R-Value	Proposed U-Factor	Budget U-Factor[a]
Head Wall - 5/CC101: Steel-Framed, 16in. o.c., [Bldg. Use 1 - Whole Building]	4363	23.0	12.0	0.045	0.064
Aluminum Entrance Door - A903: Glass (over 50% glazing): Metal Frame, Entrance Door, Perf. Specs.: Product ID EFCO D202, SHGC 0.38, [Bldg. Use 1 - Whole Building] (c)	51	---	---	0.660	0.770
Aluminum Curtainwall - A303: Metal Frame with Thermal Break: Fixed, Perf. Specs.: Product ID EFCO 5600XTherm, SHGC 0.38, [Bldg. Use 1 - Whole Building] (c)	2200	---	---	0.350	0.360
SOUTH					
Shed Wall - 6/CC101: Concrete Block, Bln., Solid Grouted, Normal Density, Furring: Metal, [Bldg. Use 1 - Whole Building]	1675	0.0	13.0	0.063	0.080
Overhead Door - A903: Other (U-Factor option), Garage door 14% glazing, [Bldg. Use 1 - Whole Building]	151	---	---	0.190	0.310
Aluminum Curtainwall - A303: Metal Frame with Thermal Break: Fixed, Perf. Specs.: Product ID EFCO 5600XTherm, SHGC 0.38, [Bldg. Use 1 - Whole Building] (c)	195	---	---	0.350	0.360
Head Wall - 5/CC101: Steel-Framed, 16in. o.c., [Bldg. Use 1 - Whole Building]	2770	23.0	12.0	0.045	0.064
FRP Door - A903: Insulated Metal, Swinging, [Bldg. Use 1 - Whole Building]	103	---	---	0.310	0.370
Aluminum Entrance Door - A903: Glass (over 50% glazing): Metal Frame, Entrance Door, Perf. Specs.: Product ID EFCO D202, SHGC 0.38, [Bldg. Use 1 - Whole Building] (c)	30	---	---	0.660	0.770
Aluminum Curtainwall - A303: Metal Frame with Thermal Break: Fixed, Perf. Specs.: Product ID EFCO 5600XTherm, SHGC 0.38, [Bldg. Use 1 - Whole Building] (c)	111	---	---	0.350	0.360
Penthouse Wall - 6/CC101: Other Steel Framed Wall, [Bldg. Use 1 - Whole Building] (b)	454	---	---	0.052	0.064
FRP Door - A903: Insulated Metal, Swinging, [Bldg. Use 1 - Whole Building]	33	---	---	0.310	0.370
WEST					
Penthouse Wall - 6/CC101: Other Steel Framed Wall, [Bldg. Use 1 - Whole Building] (b)	2575	---	---	0.052	0.064
Shed Wall - 6/CC101: Concrete Block, Bln., Solid Grouted, Normal Density, Furring: Metal, [Bldg. Use 1 - Whole Building]	5226	0.0	13.0	0.063	0.080
Overhead Door - A903: Other (U-Factor option), Garage door 14% glazing, [Bldg. Use 1 - Whole Building]	429	---	---	0.190	0.310
FRP Door - A903: Insulated Metal, Swinging, [Bldg. Use 1 - Whole Building]	51	---	---	0.310	0.370
Aluminum Curtainwall - A303: Metal Frame with Thermal Break: Fixed, Perf. Specs.: Product ID EFCO 5600XTherm, SHGC 0.38, [Bldg. Use 1 - Whole Building] (c)	976	---	---	0.350	0.360
Head Wall - 5/CC101: Steel-Framed, 16in. o.c., [Bldg. Use 1 - Whole Building]	4102	23.0	12.0	0.045	0.064
Aluminum Entrance Door - A903: Glass (over 50% glazing): Metal Frame, Entrance Door, Perf. Specs.: Product ID EFCO D202, SHGC 0.38, [Bldg. Use 1 - Whole Building] (c)	76	---	---	0.660	0.770
Aluminum Curtainwall - A303: Metal Frame with Thermal Break: Fixed, Perf. Specs.: Product ID EFCO 5600XTherm, SHGC 0.38, [Bldg. Use 1 - Whole Building] (c)	1069	---	---	0.350	0.360

(a) Budget U-factors are used for software baseline calculations ONLY, and are not code requirements.
(b) 'Other' components require supporting documentation for proposed U-factors.
(c) Fenestration product performance must be certified in accordance with NFRC and requires supporting documentation.
(d) Slab-On-Grade proposed and budget U-factors shown in table are F-factors.

Project Notes

62,000 sf new building, partially wood frame, partially steel

Envelope PASSES: Design 9% better than code

Envelope Compliance Statement

Compliance Statement: The proposed envelope design represented in this document is consistent with the building plans, specifications, and other calculations submitted with this permit application. The proposed envelope systems have been designed to meet the 2020 New York State Energy Conservation Construction Code requirements in COMcheck Version COMcheckWeb and to comply with any applicable mandatory requirements listed in the Inspection Checklist.

Matthew Lacey - Principal — 03/21/2025
Name - Title — Signature — Date

REGISTERED ARCHITECT MATTHEW E. LACEY 039779 STATE OF NEW YORK

EXPIRATION DATE: 05-31-2028

COMcheck Software Version COMcheckWeb

Interior Lighting Compliance Certificate

Project Information

Energy Code: 2020 New York State Energy Conservation Construction Code
Project Title: MVCC SandT
Project Type: New Construction

Construction Site: Owner/Agent: Designer/Contractor:

Additional Efficiency Package(s)

Credits: 1.0 Required 1.0 Proposed
Reduced Lighting Power, 1.0 credit

Allowed Interior Lighting Power

A Area Category	B Floor Area (ft2)	C Allowed Watts / ft2	D Allowed Watts
1-Whole Building (School/University)	61945	0.73	45158
		Total Allowed Watts =	45158

Proposed Interior Lighting Power

A Fixture ID : Description / Lamp / Wattage Per Lamp / Ballast	B Lamps/ Fixture	C # of Fixture	D Fixture Watt.	E (C X D)
1-Whole Building (School/University)				
LED: L1A: 4' linear pendant: Other:	1	18	15	274
LED: L1B: 5' linear pendant: Other:	1	26	19	494
LED: L2A: 4' linear lay-in: Other:	1	6	18	108
LED: L2B: 4' linear lay-in: Other:	1	9	32	284
LED: L2C: 6' linear lay-in: Other:	1	24	43	1022
LED: L2D: 8' linear lay-in: Other:	1	17	85	1442
LED: L3A: 4' wing rail: Other:	1	1	15	15
LED: L3B: 5' wing rail: Other:	1	3	19	57
LED: L3C: 6' wing rail: Other:	1	29	23	661
LED: L4: 4' high abuse linear: Other:	1	12	24	283
LED: L5A: 2x2 flat panel: Other:	1	6	22	132
LED: L5B: 2x2 flat panel: Other:	1	4	30	121
LED: L5C: 2x2 flat panel: Other:	1	41	41	1665
LED: L6: 4" dia. downlight: Other:	1	6	6	39
LED: L7: 16" dia. low bay: Other:	1	56	55	3102
LED: L7A: 12" dia. low bay: Other:	1	8	35	280
LED: L8B: 4.5" dia. cylinder: Other:	1	23	24	552
LED: L8A: 4.5" dia. cylinder: Other:	1	4	24	96
LED: L8C: 4.5" dia. cylinder: Other:	1	27	24	648
LED: L9A: 4' perimeter slot: Other:	1	3	19	57
LED: L9B: 5' perimeter: Other:	1	1	24	24
LED: L9C: 6' perimeter slot: Other:	1	1	28	28
LED: L9D: 8' perimeter slot: Other:	1	4	38	151
			Total Proposed Watts =	45158

A Fixture ID : Description / Lamp / Wattage Per Lamp / Ballast	B Lamps/ Fixture	C # of Fixture	D Fixture Watt.	E (C X D)
LED: L10A: 36" dia. shade: Other:	1	3	48	144
LED: L10B: 36" dia shade: Other:	1	3	48	144
LED: L10C: 48" dia. shade: Other:	1	5	77	385
LED: L10D: 48" dia. shade: Other:	1	5	77	385
LED: L11: 16" dia. low bay: Other:	1	28	192	5376
LED: L13A: 12" dia. low bay: Other:	1	2	42	84
LED: L12A: 4' lensed strip light: Other:	1	22	24	528
LED: L12B: 4' lensed strip light: Other:	1	13	16	213
LED: L12C: 4' lensed strip light: Other:	1	26	24	624
LED: L12D: 4' lensed strip light: Other:	1	34	35	1190
LED: L13: 8" dia. cylinder: Other:	1	51	24	1209
LED: L14: vaporproof: Other:	1	1	26	26
LED: L15: step light: Other:	1	25	4	98
LED: L16A: 51'-4" chain module: Other:	1	1	253	253
LED: L16B: 40' of chain module: Other:	1	1	193	193
LED: L17: compact floodlight: Other:	1	4	51	204
LED: L18: 32' wall grazer: Other:	1	1	192	192
LED: L19: indirect wall scope: Other:	1	1	100	100
LED: I7C: 16" dia. low bay: Other:	1	9	70	630
LED: L20: display light: Other:	1	5	55	276
LED: L21: under cabinet light: Other:	1	31	9	291
LED: EX1: exit light: Other:	1	16	1	22
LED: EX2: exit light: Other:	1	10	1	14
LED: EX3: exit light: Other:	1	2	1	2
LED: EX4: exit light: Other:	1	2	1	2
LED: EX5: exit light special letters: Other:	1	4	1	6
LED: EX6: exit light special letters: Other:	1	1	1	1
LED: L13A: 8" dia. cylinder: Other:	1	21	40	840
LED: L2E: 8' linear lay-in: Other:	1	13	98	1279
			Total Proposed Watts =	26247

Interior Lighting PASSES: Design 42% better than code

Interior Lighting Compliance Statement

Compliance Statement: The proposed interior lighting design represented in this document is consistent with the building plans, specifications, and other calculations submitted with this permit application. The proposed interior lighting systems have been designed to meet the 2020 New York State Energy Conservation Construction Code requirements in COMcheck Version COMcheckWeb and to comply with any applicable mandatory requirements listed in the Inspection Checklist.

William H. Towne - President — 03/16/2025
Name - Title — Signature — Date

LICENSED PROFESSIONAL ENGINEER WILLIAM H. TOWNE No. 045860 UNIVERSITY OF THE STATE OF NEW YORK

COMcheck Software Version COMcheckWeb

Exterior Lighting Compliance Certificate

Project Information

Energy Code: 2020 New York State Energy Conservation Construction Code
Project Title: MVCC SandT
Project Type: New Construction
Exterior Lighting Zone: 2 (Residential mixed use area (LZ2))

Construction Site: Owner/Agent: Designer/Contractor:

Allowed Exterior Lighting Power

A Area/Surface Category	B Quantity	C Allowed Watts /	D Tradable Wattage	E Allowed Watts (B X C)
uncovered (Parking area)	48335 ft2	0.04	Yes	1933
Vest_V101 (Entry canopy)	109 ft2	0.25	Yes	27
		Total Tradable Watts (a) =		2012
		Total Allowed Watts =		2012
		Total Allowed Supplemental Watts (b) =		400

(a) Wattage tradeoffs are only allowed between tradable areas/surfaces.
(b) A supplemental allowance equal to 400 watts may be applied toward compliance of both non-tradable and tradable areas/surfaces.

Proposed Exterior Lighting Power

A Fixture ID : Description / Lamp / Wattage Per Lamp / Ballast	B Lamps/ Fixture	C # of Fixture	D Fixture Watt.	E (C X D)
uncovered (Parking area, 48335 ft2): Tradable Wattage				
LED: LX2: light pole: Other:	1	1	44	44
LED: LX4: light pole: Other:	2	4	88	352
LED: LX1: wall pack: Other:	1	18	34	616
Vest_103 (Entry canopy, 87 ft2): Tradable Wattage				
Vest_V101 (Entry canopy, 109 ft2): Tradable Wattage				
LED: LX3: pendant: Other:	1	1	15	15
Vest_V100 (Entry canopy, 120 ft2): Tradable Wattage				
			Total Tradable Proposed Watts =	1027

Exterior Lighting PASSES: Design 57% better than code

Exterior Lighting Compliance Statement

Compliance Statement: The proposed exterior lighting design represented in this document is consistent with the building plans, specifications, and other calculations submitted with this permit application. The proposed exterior lighting systems have been designed to meet the 2020 New York State Energy Conservation Construction Code requirements in COMcheck Version COMcheckWeb and to comply with any applicable mandatory requirements listed in the Inspection Checklist.

William H. Towne - President — 03/16/2025
Name - Title — Signature — Date

LICENSED PROFESSIONAL ENGINEER WILLIAM H. TOWNE No. 045860 UNIVERSITY OF THE STATE OF NEW YORK

COMcheck Software Version COMcheckWeb

Mechanical Compliance Certificate

Project Information

Energy Code: 2020 New York State Energy Conservation Construction Code
Project Title: MVCC SandT
Location: Utica, New York
Climate Zone: 6a
Project Type: New Construction

Construction Site: Owner/Agent: Designer/Contractor:

Additional Efficiency Package(s)

Credits: 1.0 Required 1.0 Proposed
Reduced Lighting Power, 1.0 credit

Mechanical Systems List

Quantity	System Type & Description
1	HVAC System (Single Zone): Heating: 1 each - Hydronic or Steam Coil, Hot Water, Capacity = 240 kBtu/h; No minimum efficiency requirement applies; Cooling: 1 each - Hydronic Coil, Capacity = 212 kBtu/h, Air Economizer; No minimum efficiency requirement applies; Fan System: HVACU-WELD	Welding Lab -- Compliance (Brake HP and fan efficiency method) : Passes; Fans: HVACU-WELD-REF Return, Constant Volume, 5700 CFM, 3.0 motor nameplate hp, 2.0 design brake hp (2.0 max. BHP), 75.0 fan efficiency grade, 75.0 total fan efficiency, 70.0 design fan efficiency; HVACU-WELD-SF Supply, Constant Volume, 6000 CFM, 5.0 motor nameplate hp, 3.6 design brake hp (3.6 max. BHP), 75.0 fan efficiency grade, 75.0 total fan efficiency, 70.0 design fan efficiency
1	HVAC System (Single Zone): Heating: 1 each - Hydronic or Steam Coil, Hot Water, Capacity = 158 kBtu/h; No minimum efficiency requirement applies; Cooling: 1 each - Hydronic Coil, Capacity = 140 kBtu/h, Air Economizer; No minimum efficiency requirement applies; Fan System: HVACU-HVAC	HVAC Lab -- Compliance (Brake HP and fan efficiency method) : Passes; Fans: HVACU-HVAC-SF Supply, Constant Volume, 4000 CFM, 5.0 motor nameplate hp, 3.1 design brake hp (3.1 max. BHP), 70.0 fan efficiency grade, 75.0 total fan efficiency, 70.0 design fan efficiency; HVACU-HVAC-REF Return, Constant Volume, 3800 CFM, 2.0 motor nameplate hp, 1.6 design brake hp (1.6 max. BHP), 70.0 fan efficiency grade, 75.0 total fan efficiency, 70.0 design fan efficiency
1	HVAC System (Single Zone): Heating: 1 each - Hydronic or Steam Coil, Hot Water, Capacity = 240 kBtu/h; No minimum efficiency requirement applies; Cooling: 1 each - Hydronic Coil, Capacity = 212 kBtu/h, Air Economizer; No minimum efficiency requirement applies; Fan System: HVACU-MACHCNC	Machine/CNC Lab -- Compliance (Brake HP and fan efficiency method) : Passes; Fans: HVACU-MACHCNC-SF Supply, Constant Volume, 6000 CFM, 5.0 motor nameplate hp, 3.6 design brake hp (3.6 max. BHP), 75.0 fan efficiency grade, 75.0 total fan efficiency, 70.0 design fan efficiency; HVACU-MACHCNC-REF Return, Constant Volume, 5700 CFM, 3.0 motor nameplate hp, 2.0 design brake hp (2.0 max. BHP), 75.0 fan efficiency grade, 75.0 total fan efficiency, 70.0 design fan efficiency
1	HVAC System (Multiple-Zone): Heating: 1 each - Hydronic or Steam Coil, Hot Water, Capacity = 200 kBtu/h; No minimum efficiency requirement applies; Cooling: 1 each - Hydronic Coil, Capacity = 175 kBtu/h, Air Economizer

Quantity	System Type & Description
	No minimum efficiency requirement applies; Fan System: HVACU-CIVIL	Civil/CAD Lab -- Compliance (Brake HP and fan efficiency method) : Passes; Fans: HVACU-CIVIL-SF Supply, Multi-Zone VAV, 5000 CFM, 5.0 motor nameplate hp, 4.2 design brake hp (4.2 max. BHP), 75.0 fan efficiency grade, 75.0 total fan efficiency, 70.0 design fan efficiency; HVACU-CIVIL-REF Return, Multi-Zone VAV, 4750 CFM, 2.0 motor nameplate hp, 1.7 design brake hp (1.7 max. BHP), 75.0 fan efficiency grade, 75.0 total fan efficiency, 70.0 design fan efficiency
1	HVAC System (Multiple-Zone): Heating: 1 each - Hydronic or Steam Coil, Hot Water, Capacity = 240 kBtu/h; No minimum efficiency requirement applies; Cooling: 1 each - Hydronic Coil, Capacity = 212 kBtu/h, Air Economizer; No minimum efficiency requirement applies; Fan System: HVACU-MAT	Materials Lab -- Compliance (Brake HP and fan efficiency method) : Passes; Fans: HVACU-MAT-SF Supply, Constant Volume, 6000 CFM, 7.5 motor nameplate hp, 3.6 design brake hp (3.6 max. BHP), 75.0 fan efficiency grade, 75.0 total fan efficiency, 70.0 design fan efficiency; HVACU-MAT-REF Return, Constant Volume, 5700 CFM, 3.0 motor nameplate hp, 2.0 design brake hp (2.0 max. BHP), 75.0 fan efficiency grade, 75.0 total fan efficiency, 70.0 design fan efficiency
1	HVAC System (Single Zone): Heating: 1 each - Hydronic or Steam Coil, Hot Water, Capacity = 285 kBtu/h; No minimum efficiency requirement applies; Cooling: 1 each - Hydronic Coil, Capacity = 248 kBtu/h, Air Economizer; No minimum efficiency requirement applies; Fan System: HVACU-ELEC	Electric Codes Lab -- Compliance (Brake HP and fan efficiency method) : Passes; Fans: HVACU-ELEC-REF Return, Constant Volume, 6650 CFM, 3.0 motor nameplate hp, 2.5 design brake hp (2.5 max. BHP), 75.0 fan efficiency grade, 75.0 total fan efficiency, 70.0 design fan efficiency; HVACU-ELEC-SF Supply, Constant Volume, 7000 CFM, 7.5 motor nameplate hp, 4.0 design brake hp (4.0 max. BHP), 75.0 fan efficiency grade, 75.0 total fan efficiency, 70.0 design fan efficiency
1	HVAC System (Multiple-Zone): Heating: 1 each - Hydronic or Steam Coil, Hot Water, Capacity = 405 kBtu/h; No minimum efficiency requirement applies; Cooling: 1 each - Hydronic Coil, Capacity = 355 kBtu/h, Air Economizer; No minimum efficiency requirement applies; Fan System: HVACU-CONTROLS	Controls Lab and ADA Ramp -- Compliance (Brake HP and fan efficiency method) : Passes; Fans: HVACU-CONTROLS-SF Supply, Multi-Zone VAV, 10000 CFM, 10.0 motor nameplate hp, 8.7 design brake hp (8.7 max. BHP), 75.0 fan efficiency grade, 75.0 total fan efficiency, 70.0 design fan efficiency; HVACU-CONTROLS-REF Return, Multi-Zone VAV, 9500 CFM, 5.0 motor nameplate hp, 3.1 design brake hp (3.1 max. BHP), 75.0 fan efficiency grade, 75.0 total fan efficiency, 70.0 design fan efficiency
1	HVAC System (Multiple-Zone): Heating: 1 each - Hydronic or Steam Coil, Hot Water, Capacity = 600 kBtu/h; No minimum efficiency requirement applies; Cooling: 1 each - Hydronic Coil, Capacity = 530 kBtu/h, Air Economizer; No minimum efficiency requirement applies; Fan System: HVACU-CLASS	Head Classrooms -- Compliance (Brake HP and fan efficiency method) : Passes; Fans: HVACU-CLASS-SF Supply, Multi-Zone VAV, 15000 CFM, 20.0 motor nameplate hp, 13.8 design brake hp (13.8 max. BHP), 75.0 fan efficiency grade, 75.0 total fan efficiency, 70.0 design fan efficiency; HVACU-CLASS-REF Return, Multi-Zone VAV, 14250 CFM, 7.5 motor nameplate hp, 4.8 design brake hp (4.8 max. BHP), 75.0 fan efficiency grade, 75.0 total fan efficiency, 70.0 design fan efficiency
1	HVAC System (Multiple-Zone): Heating: 1 each - Hydronic or Steam Coil, Hot Water, Capacity = 600 kBtu/h; No minimum efficiency requirement applies; Cooling: 1 each - Hydronic Coil, Capacity = 530 kBtu/h, Air Economizer; No minimum efficiency requirement applies; Fan System: HVACU-NHEAD	North of Head Building/Lobby -- Compliance (Brake HP and fan efficiency method) : Passes; Fans:

Quantity	System Type & Description
	HVACU-NHEAD-SF Supply, Multi-Zone VAV, 15000 CFM, 20.0 motor nameplate hp, 13.8 design brake hp (13.8 max. BHP), 75.0 fan efficiency grade, 75.0 total fan efficiency, 70.0 design fan efficiency; HVACU-NHEAD-REF Return, Multi-Zone VAV, 14250 CFM, 7.5 motor nameplate hp, 4.8 design brake hp (4.8 max. BHP), 75.0 fan efficiency grade, 75.0 total fan efficiency, 70.0 design fan efficiency
1	HVAC System (Single Zone): Heating: 1 each - Hydronic or Steam Coil, Hot Water, Capacity = 1950 kBtu/h; No minimum efficiency requirement applies; Cooling: 1 each - Hydronic Coil, Capacity = 580 kBtu/h, Air Economizer; No minimum efficiency requirement applies; Fan System: MUAU-WELD	Welding Lab Make Up Air -- Compliance (Brake HP and fan efficiency method) : Passes; Fans: MUAU-WELD-SF-2 Supply, Single-Zone VAV, 7500 CFM, 10.0 motor nameplate hp, 6.1 design brake hp (6.1 max. BHP), 75.0 fan efficiency grade, 75.0 total fan efficiency, 70.0 design fan efficiency; MUAU-WELD-SF-1 Supply, Single-Zone VAV, 7500 CFM, 10.0 motor nameplate hp, 6.1 design brake hp (6.1 max. BHP), 75.0 fan efficiency grade, 75.0 total fan efficiency, 70.0 design fan efficiency
1	HVAC System (Multiple-Zone): Heating: 1 each - Hydronic or Steam Coil, Hot Water, Capacity = 1950 kBtu/h; No minimum efficiency requirement applies; Cooling: 1 each - Hydronic Coil, Capacity = 925 kBtu/h, Air Economizer; No minimum efficiency requirement applies; Fan System: MUAU-CHEM	Chemistry Labs -- Compliance (Brake HP and fan efficiency method) : Passes; Fans: MUAU-CHEM-SF-1 Supply, Constant Volume, 7500 CFM, 10.0 motor nameplate hp, 7.0 design brake hp (7.0 max. BHP), 75.0 fan efficiency grade, 75.0 total fan efficiency, 70.0 design fan efficiency; MUAU-CHEM-SF-2 Supply, Constant Volume, 7500 CFM, 10.0 motor nameplate hp, 7.0 design brake hp (7.0 max. BHP), 75.0 fan efficiency grade, 75.0 total fan efficiency, 70.0 design fan efficiency
1	HVAC System (Single Zone): Heating: 1 each - Hydronic or Steam Coil, Hot Water, Capacity = 150 kBtu/h; No minimum efficiency requirement applies; Fan System: HVU-BOILER	Boiler Room Combustion Air -- Compliance (Brake HP and fan efficiency method) : Passes; Fans: HVU-BOILER-SF Supply, Constant Volume, 3000 CFM, 3.0 motor nameplate hp, 2.3 design brake hp (2.3 max. BHP), 75.0 fan efficiency grade, 75.0 total fan efficiency, 70.0 design fan efficiency
1	HVAC System (Unknown w/ PerimeterSystem): Heating: 1 each - Unit Heater, Hot Water, Capacity = 270 kBtu/h; No minimum efficiency requirement applies
1	HVAC System (Unknown w/ PerimeterSystem): Heating: 3 each - Unit Heater, Hot Water, Capacity = 215 kBtu/h; No minimum efficiency requirement applies
2	Plant: Heating: Hot Water Boiler, Capacity 5500 kBtuh, Gas; Proposed Efficiency: 85.00 % Ec, Required Efficiency: 82.00 % Ec
1	Plant: Cooling: Water Chiller, Capacity 240 tons, Condenser Air-Cooled, Rotary Screw or Scroll Chiller; Proposed Efficiency: 10.10 EER-FL, Required Efficiency: 10.10 EER-FL; Proposed Part Load Efficiency: 17.35 EER-IPLV, Required Part Load Efficiency: 14.00 EER-IPLV
2	Water Heater: Gas Storage Water Heater, Capacity: 120 gallons, Input Rating: 300 kBtuh w/ Circulation Pump; Proposed Efficiency: 96.00 % Et, Required Efficiency: 80.00 % Et

Mechanical Compliance Statement

Compliance Statement: The proposed mechanical design represented in this document is consistent with the building plans, specifications, and other calculations submitted with this permit application. The proposed mechanical systems have been designed to meet the 2020 New York State Energy Conservation Construction Code requirements in COMcheck Version COMcheckWeb and to comply with any applicable mandatory requirements listed in the Inspection Checklist.

William H. Towne - President — 03/16/2025
Name - Title — Signature — Date

LICENSED PROFESSIONAL ENGINEER WILLIAM H. TOWNE No. 045860 UNIVERSITY OF THE STATE OF NEW YORK

MECHANICAL COMPLIANCE STATEMENTS

1. To the best of our knowledge and understanding, a third party commissioning agent will complete the requirements set forth in section C408 of the 2020 NYS Energy Conservation Construction Code.

2. To the best of our knowledge and understanding, heating and cooling equipment has been sized and selected in accordance with section C403 of the 2020 NYS Energy Conservation Construction Code.

COMcheck Software Version COMcheckWeb

Inspection Checklist

Energy Code: 2020 New York State Energy Conservation Construction Code

Requirements: 100.0% were addressed directly in the COMcheck software

Text in the "Comments/Assumptions" column is provided by the user in the COMcheck Requirements screen. For each requirement, the user certifies that a code requirement will be met and how that is documented, or that an exception is being claimed. Where compliance is itemized in a separate table, a reference to that table is provided.

Section # & Req.ID	Plan Review	Complies?	Comments/Assumptions
C103.2 [PR1][1]	Plans and/or specifications provide all information with which compliance can be determined for the building envelope and document where exceptions to the standard are claimed.	☐Complies ☐Does Not ☐Not Observable ☐Not Applicable	Requirement will be met. **Location on plans/spec:** cc101, cc102, cc103
C103.2 [PR2][1]	Plans, specifications, and/or calculations provide all information with which compliance can be determined for the mechanical systems and equipment and document where exceptions to the standard are claimed. Load calculations per acceptable engineering standards and handbooks.	☐Complies ☐Does Not ☐Not Observable ☐Not Applicable	Requirement will be met.
C103.2 [PR3][1]	Plans, specifications, and/or calculations provide all information with which compliance can be determined for the service water heating systems and equipment and document where exceptions to the standard are claimed. Hot water system sized per manufacturer's sizing guide.	☐Complies ☐Does Not ☐Not Observable ☐Not Applicable	Requirement will be met.
C103.2 [PR4][1]	Plans, specifications, and/or calculations provide all information with which compliance can be determined for the interior lighting and electrical systems and equipment and document where exceptions to the standard are claimed. Information provided should include interior lighting power calculations, wattage of bulbs and ballasts, transformers and control devices.	☐Complies ☐Does Not ☐Not Observable ☐Not Applicable	Requirement will be met.
C103.2 [PR8][1]	Plans, specifications, and/or calculations provide all information with which compliance can be determined for the exterior lighting and electrical systems and equipment and document where exceptions to the standard are claimed. Information provided should include exterior lighting power calculations, wattage of bulbs and ballasts, transformers and control devices.	☐Complies ☐Does Not ☐Not Observable ☐Not Applicable	Requirement will be met.
C402.4.1 [PR10][1]	The vertical fenestration area <= 30 percent of the gross above-grade wall area.	☐Complies ☐Does Not ☐Not Observable ☐Not Applicable	Requirement will be met. **Location on plans/spec:** CC-102

1 High Impact (Tier 1) 2 Medium Impact (Tier 2) 3 Low Impact (Tier 3)

Section # & Req.ID	Plan Review	Complies?	Comments/Assumptions
C402.4.1 [PR11][1]	The skylight area <= 3 percent of the gross roof area.	☐Complies ☐Does Not ☐Not Observable ☐Not Applicable	Requirement will be met. **Location on plans/spec:** A-601

Additional Comments/Assumptions:

1 High Impact (Tier 1) 2 Medium Impact (Tier 2) 3 Low Impact (Tier 3)

Section # & Req.ID	Footing / Foundation Inspection	Complies?	Comments/Assumptions
C303.2 [FO4][1]	Slab edge insulation installed per manufacturer's instructions.	☐Complies ☐Does Not ☐Not Observable ☐Not Applicable	Requirement will be met.
C303.2.1 [FO6][1]	Exterior insulation protected against damage, sunlight, moisture, wind, landscaping and equipment maintenance activities.	☐Complies ☐Does Not ☐Not Observable ☐Not Applicable	Requirement will be met.
C105 [FO3][1]	Installed slab-on-grade insulation type and R-value consistent with insulation specifications reported in plans and COMcheck reports.	☐Complies ☐Does Not ☐Not Observable ☐Not Applicable	*See the Envelope Assemblies table for values.*
C402.2.4 [FO7][1]	Slab edge insulation depth/length. Slab insulation extending away from building is covered by pavement or >= 10 inches of soil.	☐Complies ☐Does Not ☐Not Observable ☐Not Applicable	Requirement will be met. *See the Envelope Assemblies table for values.*
C403.12.2 C403.12.3 [FO9][1]	Snow/ice melting system and freeze protection systems have sensors and controls configured to limit service for pavement temperature and outdoor temperature. future connection to controls.	☐Complies ☐Does Not

Section # & Req.ID	Plumbing Rough-In Inspection	Complies?	Comments/Assumptions
C404.5, C404.5.1, C404.5.2 [PL6][1]	Heated water supply piping conforms to pipe length and volume requirements. Refer to section details.	☐Complies ☐Does Not ☐Not Observable ☐Not Applicable	Requirement will be met. **Location on plans/spec:** DWG's P-103 thru P-401
C404.6.1, C404.6.2 [PL3][1]	Automatic time switches installed to automatically switch off the recirculating hot-water system or heat trace.	☐Complies ☐Does Not ☐Not Observable ☐Not Applicable	Requirement will be met.
C404.6.3 [PL7][1]	Pumps that circulate water between a heater and storage tank have controls that limit operation from startup to <= 5 minutes after end of heating cycle.	☐Complies ☐Does Not ☐Not Observable ☐Not Applicable	**Exception:** Requirement does not apply.
C404.7 [PL8][1]	Demand recirculation water systems have controls that start the pump upon receiving a signal from the action of a user of a fixture or appliance and limits the temperature of the water entering the cold-water piping to 104°F.	☐Complies ☐Does Not ☐Not Observable ☐Not Applicable	Requirement will be met.

Additional Comments/Assumptions:

1 High Impact (Tier 1) | 2 Medium Impact (Tier 2) | 3 Low Impact (Tier 3)

Section # & Req.ID	Mechanical Rough-In Inspection	Complies?	Comments/Assumptions
C402.2.6 [ME41][1]	Thermally ineffective panel surfaces of sensible heating panels have insulation >= R-3.5.	☐Complies ☐Does Not ☐Not Observable ☐Not Applicable	Requirement will be met.
C402.5.5, C403.2.4.3 [ME3][1]	Stair and elevator shaft vents have motorized dampers that automatically close. Reference section C403.7.7 for operational details.	☐Complies ☐Does Not ☐Not Observable ☐Not Applicable	**Exception:** Requirement does not apply.
C403.7.7 [ME58][1]	Outdoor air and exhaust systems have motorized dampers that automatically shut when not in use and meet maximum leakage rates. Check gravity dampers where allowed. Reference section language for operational details.	☐Complies ☐Does Not ☐Not Observable ☐Not Applicable	Requirement will be met. **Location on plans/spec:** M-603, M-604
C403.11.3 [ME61][1]	HVAC piping insulation insulated in accordance with Table C403.11.3. Insulation exposed to weather is protected from damage and is provided with shielding from solar radiation.	☐Complies ☐Does Not ☐Not Observable ☐Not Applicable	Requirement will be met. **Location on plans/spec:** M-604
C403.8.1 [ME65][1]	HVAC fan systems at design conditions do not exceed allowable fan system motor nameplate hp or fan system bhp.	☐Complies ☐Does Not ☐Not Observable ☐Not Applicable	*See the Mechanical Systems list for values.*
C403.8.2 [ME21][1]	HVAC fan motors not oversized beyond allowable limits.	☐Complies ☐Does Not ☐Not Observable ☐Not Applicable	Requirement will be met.
C403.8.3 [ME117][1]	Fans have efficiency grade (FEG) >= 67. The total efficiency of the fan at the design point of operation <= 15% of maximum total efficiency of the fan.	☐Complies ☐Does Not ☐Not Observable ☐Not Applicable	Requirement will be met.
C403.8.4 [ME142][1]	Motors for fans that are not less than 1/12 hp and less than 1 hp are electronically commutated motors or have a minimum motor efficiency of 70 percent. These motors have the means to adjust motor speed.	☐Complies ☐Does Not ☐Not Observable ☐Not Applicable	Requirement will be met.
C403.8.5 [ME143][1]	Each DX cooling system > 65 kBtu and chiller waterevaporative cooling system with fans > 1/4 hp are designed to vary the indoor fan airflow as a function of load and comply with detailed requirements of this section.	☐Complies ☐Does Not ☐Not Observable ☐Not Applicable	**Exception:** Requirement does not apply.
C403.12.1 [ME71][1]	Systems that heat outside the building envelope are radiant heat systems controlled by an occupancy sensing device or timer switch.	☐Complies ☐Does Not ☐Not Observable ☐Not Applicable	**Exception:** Requirement does not apply.
C403.2.1 [ME112][1]	Zone isolation devices and controls installed where applicable.	☐Complies ☐Does Not ☐Not Observable ☐Not Applicable	Requirement will be met.

1 High Impact (Tier 1) | 2 Medium Impact (Tier 2) | 3 Low Impact (Tier 3)

Section # & Req.ID	Mechanical Rough-In Inspection	Complies?	Comments/Assumptions
C403.5.5 [ME113][1]	Fault detection and diagnostics installed with air-cooled unitary DX units having economizers.	☐Complies ☐Does Not ☐Not Observable ☐Not Applicable	**Exception:** Requirement does not apply.
C403.2.2 [ME59][1]	Natural or mechanical ventilation is provided in accordance with International Mechanical Code Chapter 4. Mechanical ventilation has capability to reduce outdoor air supply to minimum per IMC Chapter 4.	☐Complies ☐Does Not ☐Not Observable ☐Not Applicable	Requirement will be met.
C403.7.1 [ME59][1]	Demand control ventilation provided for spaces >500 ft2 and >25 people/1000 ft2 occupant density and served by systems with air side economizer, auto modulating outside air damper control, or design airflow >3,000 cfm.	☐Complies ☐Does Not ☐Not Observable ☐Not Applicable	Requirement will be met. **Location on plans/spec:** M-603, M-604
C403.7.2 [ME115][1]	Enclosed parking garage ventilation has automatic contaminant detection and capacity to stage or modulate fans to 50% or less of design capacity.	☐Complies ☐Does Not ☐Not Observable ☐Not Applicable	**Exception:** Requirement does not apply.
C403.7.3 [ME140][1]	Units that provide ventilation air to multiple zones and operate in combination with zone heating and cooling systems do not use heating or heat recovery to warm supply air to a temperature greater than 60°F when representative building loads or outdoor air temperatures indicate that the majority of zones require cooling.	☐Complies ☐Does Not ☐Not Observable ☐Not Applicable	Requirement will be met. **Location on plans/spec:** Spec 23 55 70
C403.7.6 [ME141][1]	HVAC systems serving guestrooms in Group R-1 buildings with > 50 guestrooms: Each guestroom is provided with controls that automatically manage temperature setpoint and ventilation (see sections C403.7.6.1 and C403.7.6.2).	☐Complies ☐Does Not ☐Not Observable ☐Not Applicable	**Exception:** Requirement does not apply.
C403.7.4 [ME57][1]	Exhaust air energy recovery on systems meeting Table C403.7.4(1) and C403.7.4(2).	☐Complies ☐Does Not ☐Not Observable ☐Not Applicable	**Exception:** Labaratory fume hood systems with direct makeup (auxiliary) air supply equal to at 75% of the exhaust rate.
C403.7.5 [ME116][1]	Kitchen exhaust systems comply with replacement air and conditioned supply air limitations, and satisfy hood rating requirements and maximum exhaust rate criteria.	☐Complies ☐Does Not ☐Not Observable ☐Not Applicable	**Exception:** Requirement does not apply.
C403.11.1 [ME60][1]	HVAC ducts and plenums insulated in accordance with C403.11.1 and constructed in accordance with C403.11.2, verification may need to occur during Foundation inspection.	☐Complies ☐Does Not ☐Not Observable ☐Not Applicable	Requirement will be met.
C403.11.2 [ME60][1]	Air economizers provided where required, meet the requirements for design capacity, control signal, ventilation controls, high-limit shut-off, integrated economizer control, and provide a means to relieve excess outside air during operation.	☐Complies ☐Does Not ☐Not Observable ☐Not Applicable	Requirement will be met. **Location on plans/spec:** Spec 23 55 70

1 High Impact (Tier 1) | 2 Medium Impact (Tier 2) | 3 Low Impact (Tier 3)

Section # & Req.ID	Mechanical Rough-In Inspection	Complies?	Comments/Assumptions
C403.5.3 [ME124][1]	Air economizers automatically reduce outdoor air intake to the design minimum outdoor air quantity when outdoor air intake will not reduce cooling energy usage. See Table C403.5.3.3 for applicable device types and climate zones.	☐Complies ☐Does Not ☐Not Observable ☐Not Applicable	Requirement will be met. **Location on plans/spec:** Spec 23 55 70
C403.5.3.4 [ME125][1]	System capable of relieving excess outdoor air during air economizer operation to prevent overpressurizing the building. The relief air outlet located to avoid recirculation into the building.	☐Complies ☐Does Not ☐Not Observable ☐Not Applicable	Requirement will be met. **Location on plans/spec:** Spec 23 55 70, DWG M-203 & M-204
C403.5.3.5 [ME126][1]	Return, exhaust/relief and outdoor air dampers used in economizers have motorized dampers that automatically shut when not in use and meet maximum leakage rates. Reference section C403.7.7 for details.	☐Complies ☐Does Not ☐Not Observable ☐Not Applicable	Requirement will be met. **Location on plans/spec:** Spec 23 55 70
C403.4.1.1 [ME75][2]	Hydronic and multizone HVAC system controls serVAV fans driven by mechanical or electrical variable speed drive per Table C403.4.1.1.	☐Complies ☐Does Not ☐Not Observable ☐Not Applicable	Requirement will be met. **Location on plans/spec:** Spec 23 55 70, Static Pressure Control on Multi Zone Fan Systems
C403.4.1.2 [ME67][2]	VAV fans have static pressure sensors located so controller setpoint <=1.2 w.c..	☐Complies ☐Does Not ☐Not Observable ☐Not Applicable	Requirement will be met. **Location on plans/spec:** Spec 23 55 70
C403.4.1.3 [ME24][2]	Reset static pressure setpoint for DDC controlled VAV boxes reporting to central controller based on the zones requiring the most pressure.	☐Complies ☐Does Not ☐Not Observable ☐Not Applicable	Requirement will be met. **Location on plans/spec:** Spec 23 55 70
C403.4.3 [ME69][1]	The heating of fluids in hydronic systems that have been previously mechanically cooled, and the cooling of fluids that have been previously mechanically heated are limited in accordance with Sections C403.4.3.1-C403.4.3.3. Single boiler systems >500,000 Btu/h have multistaged or modulating burner.	☐Complies ☐Does Not ☐Not Observable ☐Not Applicable	Requirement will be met. **Location on plans/spec:** Spec 23 55 70 & DWG M-603
C403.4.3.1 [ME50][2]	Three-pipe hydronic systems using a common return for hot and chilled water are not used.	☐Complies ☐Does Not ☐Not Observable ☐Not Applicable	Requirement will be met.
C403.4.4 [ME68][1]	Hydronic systems greater than 300,000 Btu/h designed for variable fluid flow. See section langauge for full details.	☐Complies ☐Does Not ☐Not Observable ☐Not Applicable	Requirement will be met.
C403.3.4 [ME107][1]	System turndown requirement met through multiple single-input boilers, one or more modulating boilers, or a combination of single-input and modulating boilers. Boiler input between 1.0 MBtuh and 5 MBtuh has 3:1 turndown ratio, boiler input between 5.0 MBtuh and 10 MBtuh has 4:1 turndown ratio, boiler input > 10.0 MBtuh has 5:1 turndown ratio.	☐Complies ☐Does Not ☐Not Observable ☐Not Applicable	Requirement will be met. **Location on plans/spec:** M-603 *See the Mechanical Systems list for values.*

1 High Impact (Tier 1) | 2 Medium Impact (Tier 2) | 3 Low Impact (Tier 3)

Section # & Req.ID	Mechanical Rough-In Inspection	Complies?	Comments/Assumptions
C403.4.5 [ME26][1]	Chilled water plants with multiple chillers have capability to reduce flow automatically through the chiller plant when a chiller is shut down. Boiler plants with multiple boilers have the capability to reduce flow automatically through the boiler plant when a boiler is shut down.	☐Complies ☐Does Not ☐Not Observable ☐Not Applicable	Requirement will be met.
C403.6.1 [ME130][1]	Supply air systems serving multiple zones have VAV systems with controls configured to reduce the volume of air that is reheated, recooled or mixed in each zone. See section for details.	☐Complies ☐Does Not ☐Not Observable ☐Not Applicable	Requirement will be met.
C403.6.2 [ME131][1]	Single-duct VAV systems use terminal devices configured to reduce the supply of primary supply air before reheating or recooling takes place.	☐Complies ☐Does Not ☐Not Observable ☐Not Applicable	Requirement will be met.
C403.6.3 [ME132][1]	Systems that have 1 warm air duct and 1 cool air duct use terminal devices configured to reduce the flow from one duct to a minimum before mixing of air from the other takes place.	☐Complies ☐Does Not ☐Not Observable ☐Not Applicable	**Exception:** Requirement does not apply.
C403.6.4 [ME133][1]	Individual dual-duct or mixing heating and cooling systems with a single fan and with total capacities > 90,000 Btu/h not equipped with air economizers.	☐Complies ☐Does Not ☐Not Observable ☐Not Applicable	**Exception:** Requirement does not apply.
C403.6.5 [ME134][1]	Multiple zone HVAC systems have supply air temperature reset controls.	☐Complies ☐Does Not ☐Not Observable ☐Not Applicable	Requirement will be met. **Location on plans/spec:** Spec 23 55 70
C403.6.7 [ME136][1]	Parallel-flow fan-powered VAV air terminals have automatic controls configured to 1) turn off the terminal fan except when space heating is required or where required for ventilation, 2) turn on the terminal fan as the first stage of heating before the heating coil is activated, and 3) during heating for warmup or setback temperature control, either operate the terminal fan and heating coil without primary air or, reverse the terminal damper logic and provide heating from the central air handler by primary air.	☐Complies ☐Does Not ☐Not Observable ☐Not Applicable	**Exception:** Requirement does not apply.
C403.6.8 [ME137][1]	Systems with DDC of individual zones reporting to the central control panel configured to reset the static pressure setpoint based on zone requiring the most pressure. The DDC is capable of monitoring zone damper positions or have an alternative method of indicating the need for static pressure. See section for details.	☐Complies ☐Does Not ☐Not Observable ☐Not Applicable	Requirement will be met.
C403.6.9 [ME138][1]	Static pressure sensors used to control VAV fans located such that the controller setpoint is <= 1.2 inches w.c.. Where this results in one or more sensors being located downstream of major duct splits, not less than one sensor located on each major branch.	☐Complies ☐Does Not ☐Not Observable ☐Not Applicable	Requirement will be met.

1 High Impact (Tier 1) | 2 Medium Impact (Tier 2) | 3 Low Impact (Tier 3)

Section # & Req.ID	Mechanical Rough-In Inspection	Complies?	Comments/Assumptions
C403.6.6 [ME135][1]	Multiple zone VAV systems with DDC of individual zone boxes have static pressure setpoint reset controls.	☐Complies ☐Does Not ☐Not Observable ☐Not Applicable	Requirement will be met. **Location on plans/spec:** Spec 23 55 70 *See the Mechanical Systems list for values.*
C403.4.1.4 [ME63][2]	Heating for vestibules and air curtains with integral heating include automatic controls that shut off the heating system when outdoor air temperatures > 45F. Vestibule heating and cooling systems controlled by a thermostat in the vestibule with heating setpoint <= 60F and cooling setpoint >= 80F.	☐Complies ☐Does Not ☐Not Observable ☐Not Applicable	Requirement will be met. **Location on plans/spec:** Spec 23 55 70
C403.9.5 [ME31][1]	Condenser heat recovery system that can heat water to 85 ºF or provide 60% of peak heat rejection is installed for preheating of service hot water.	☐Complies ☐Does Not ☐Not Observable ☐Not Applicable	**Exception:** Design SWH load = 1 MMBtu/h.
C403.3.3 [ME35][1]	Hot gas bypass limited to: <=240 kBtu/h - 50% >240 kBtu/h - 25%	☐Complies ☐Does Not ☐Not Observable ☐Not Applicable	Requirement will be met.
C404.2.1 [ME111][1]	Gas-fired water-heating equipment installed in new buildings: where a singular piece of water-heating equipment >= 1,000 kBtu/h serves the entire building, thermal efficiency >= 90 Et. Where multiple pieces of water-heating equipment serve the building with combined rating >= 1,000 kBtu/h, the combined input-capacity-weighted-average thermal efficiency >= 90 Et. Exclude input rating of equipment in individual dwelling units and equipment <= 100 kBtu/h.	☐Complies ☐Does Not ☐Not Observable ☐Not Applicable	Requirement will be met.
C408.2.2.1 [ME53][1]	Air outlets and zone terminal devices have means for air balancing.	☐Complies ☐Does Not ☐Not Observable ☐Not Applicable	Requirement will be met.
C408.2.2.2 [ME54][1]	HVAC hydronic heating and cooling coils have means to balance and have pressure test connections.	☐Complies ☐Does Not ☐Not Observable ☐Not Applicable	Requirement will be met.
C403.5, C403.5.1, C403.5.2 [ME123][1]	Refrigerated display cases, walk-in coolers or walk-in freezers served by remote compressors and remote condensers not located in a condensing unit, have fan-powered condensers that comply with Sections C403.5.1 and refrigeration compressor systems that comply with C403.5.2.	☐Complies ☐Does Not ☐Not Observable ☐Not Applicable	**Exception:** Requirement does not apply.

Additional Comments/Assumptions:

1 High Impact (Tier 1) | 2 Medium Impact (Tier 2) | 3 Low Impact (Tier 3)

Section # & Req.ID	Rough-In Electrical Inspection	Complies?	Comments/Assumptions
C405.2.2.2 [EL22][1]	Spaces required to have light-reduction controls have a manual control that allows the occupant to reduce the connected lighting load in a reasonably uniform illumination pattern >= 50 percent.	☐Complies ☐Does Not ☐Not Observable ☐Not Applicable	Requirement will be met.
C405.2.1, C405.2.1.1 [EL18][1]	Occupancy sensors installed in classrooms/lecture/training rooms, conference/meeting/multipurpose rooms, copy/printing rooms, lounges/breakrooms, enclosed offices, open plan office areas, restrooms, storage rooms, locker rooms, warehouse storage areas, and other spaces <= 300 sqft that are enclosed by floor-to-ceiling height partitions. Reference section langauge C405.2.1.2 for control function in warehouses and section C405.2.1.3 for open plan office spaces.	☐Complies ☐Does Not ☐Not Observable ☐Not Applicable	Requirement will be met.
C405.2.1.2 [EL19][1]	Occupancy sensor control function in warehouses: In warehouses, the lighting in aisleways and open areas is controlled with occupant sensors that automatically reduce lighting power by 50% or more when the areas are unoccupied. The occupant sensors control lighting in each aisleway independently and do not control lighting beyond the aisleway being controlled by the sensor.	☐Complies ☐Does Not ☐Not Observable ☐Not Applicable	**Exception:** Requirement does not apply.
C405.2.1.3 [EL20][1]	Occupant sensor control function in open plan office areas: Occupant sensor controls in open office spaces >= 300 sq.ft. have controls 1) configured so that general lighting can be controlled separately in control zones with floor areas <= 600 sq.ft. within the space, 2) automatically turn off general lighting in all control zones within 20 minutes after all occupants have left the space, 3) are configured so that general lighting power in each control zone is reduced by >= 80% of the full zone general lighting power within 20 minutes of all occupants leaving that control zone, and 4) are configured such that any daylight responsive control will activate space general lighting or control zone general lighting only when occupancy for the same area is detected.	☐Complies ☐Does Not ☐Not Observable ☐Not Applicable	**Exception:** Requirement does not apply.
C405.2.2.1, C405.2.2.2 [EL21][1]	Each area not served by occupancy sensors (per C405.2.1) have time-switch controls and functions detailed in sections C405.2.2.1 and C405.2.2.2.	☐Complies ☐Does Not ☐Not Observable ☐Not Applicable	**Exception:** Lighting controlled by occupancy sensors.

1 High Impact (Tier 1) | 2 Medium Impact (Tier 2) | 3 Low Impact (Tier 3)

Section # & Req.ID	Rough-In Electrical Inspection	Complies?	Comments/Assumptions
C405.2.3, C405.2.3.1, C405.2.3.2 [EL23][1]	Daylight zones provided with daylight responsive control the lights independent of general area lighting. See code section C405.2.3 Daylight-responsive controls for applicable spaces. C405.2.3.1 Daylight responsive control function and section C405.2.3.2 Sidelit zone.	☐Complies ☐Does Not ☐Not Observable ☐Not Applicable	**Exception:** New buildings having total connected lighting power = the adjusted interior lightin powere allowance (LPA adj, refer to section details and formula).
C405.2.4 [EL24][1]	Separate lighting control devices for specific uses installed per approved lighting plans.	☐Complies ☐Does Not ☐Not Observable ☐Not Applicable	Requirement will be met.
C405.2.4 [EL27][1]	Additional interior lighting power allowed for special functions per the approved lighting plans and is automatically controlled and separated from general lighting.	☐Complies ☐Does Not ☐Not Observable ☐Not Applicable	Requirement will be met.
C405.2.5 [EL28][1]	Manual controls required by the energy code are in a location with ready access to occupants and located where the controlled lights are visible, or identify the area served and their status.	☐Complies ☐Does Not ☐Not Observable ☐Not Applicable	Requirement will be met.
C405.2.6 [EL30][1]	Automatic lighting controls for exterior lighting installed. Controls will be daylight controlled, set based on business operation time-of-day, or reduce connected lighting > 30%.	☐Complies ☐Does Not ☐Not Observable ☐Not Applicable	Requirement will be met.
C405.3 [EL6][1]	Exit signs do not exceed 5 watts per face.	☐Complies ☐Does Not ☐Not Observable ☐Not Applicable	Requirement will be met.

Additional Comments/Assumptions:

1 High Impact (Tier 1) | 2 Medium Impact (Tier 2) | 3 Low Impact (Tier 3)

Section # & Req.ID	Insulation Inspection	Complies?	Comments/Assumptions
C303.1 [IN3][1]	Roof insulation installed per manufacturer's instructions. Blown or poured loose-fill insulation is installed only where the roof slope is <=3 in 12.	☐Complies ☐Does Not ☐Not Observable ☐Not Applicable	Requirement will be met. **Location on plans/spec:** A-601, A-602
C402.2.1 [IN20][1]	Insulation installed on a suspended ceiling having ceiling tiles is not being specified for roor/ceiling assemblies. Continuous insulation board installed in 2 or more layers with edge joints offset between layers.	☐Complies ☐Does Not ☐Not Observable ☐Not Applicable	Requirement will be met.
C303.1 [IN10][2]	Building envelope insulation is labeled with R-value or insulation certificate providing R-value and other relevant data.	☐Complies ☐Does Not ☐Not Observable ☐Not Applicable	Requirement will be met.
C303.2 [IN7][1]	Above-grade wall insulation installed per manufacturer's instructions.	☐Complies ☐Does Not ☐Not Observable ☐Not Applicable	Requirement will be met.
C105 [IN6][1]	Installed above-grade wall insulation type and R-value consistent with insulation specifications reported in plans and COMcheck reports.	☐Complies ☐Does Not ☐Not Observable ☐Not Applicable	*See the Envelope Assemblies table for values.*
C402.2.3 [IN8][2]	Installed floor insulation type and R-value consistent with insulation specifications reported in plans and COMcheck reports.	☐Complies ☐Does Not ☐Not Observable ☐Not Applicable	*See the Envelope Assemblies table for values.*
C402.2.6 [IN18][1]	Radiant panels and associated components, designed for heat transfer from the panel surfaces to the occupants or indoor space are insulated with a minimum of R-3.5.	☐Complies ☐Does Not ☐Not Observable ☐Not Applicable	**Exception:** Requirement does not apply.
C105 [IN2][1]	Installed roof insulation type and R-value consistent with insulation specifications reported in plans and COMcheck reports. For some ceiling systems, verification may need to occur during Framing Inspection.	☐Complies ☐Does Not ☐Not Observable ☐Not Applicable	*See the Envelope Assemblies table for values.*
C402.5.1.1 [IN1][1]	All sources of air leakage in the building thermal envelope are sealed, caulked, gasketed, weather stripped or wrapped with moisture vapor-permeable wrapping material to minimize air leakage.	☐Complies ☐Does Not ☐Not Observable ☐Not Applicable	Requirement will be met. **Location on plans/spec:** CC-101, A-401 - A-406

Additional Comments/Assumptions:

1 High Impact (Tier 1) | 2 Medium Impact (Tier 2) | 3 Low Impact (Tier 3)

Section # & Req.ID	Final Inspection	Complies?	Comments/Assumptions
C303.3, C408.2.5.2 [FI7][1]	Furnished O&M instructions for systems and equipment to the building owner or designated representative.	☐Complies ☐Does Not ☐Not Observable ☐Not Applicable	Requirement will be met.
C303.3, C408.2.5.3 [FI8][1]	Furnished O&M manuals for HVAC systems within 90 days of system acceptance.	☐Complies ☐Does Not ☐Not Observable ☐Not Applicable	Requirement will be met.
C402.5.6 [FI37][2]	Weatherseals installed on all loading dock cargo door openings and provide direct contact along the top and sides of vehicles parked in the doorway.	☐Complies ☐Does Not ☐Not Observable ☐Not Applicable	Requirement will be met. **Location on plans/spec:** a-903
C402.5.8 [FI26][1]	Recessed luminaires in thermal envelope to limit infiltration and be IC rated and labeled. Seal between interior finish and luminaire housing.	☐Complies ☐Does Not ☐Not Observable ☐Not Applicable	**Exception:** Requirement does not apply.
C403.2.2 [FI27][1]	HVAC systems and equipment capacity does not exceed calculated loads.	☐Complies ☐Does Not ☐Not Observable ☐Not Applicable	Requirement will be met.
C403.2.4.1 [FI47][1]	Heating and cooling to each zone is controlled by a thermostat control. Minimum one humidity control device per installed humidification/dehumidification system.	☐Complies ☐Does Not ☐Not Observable ☐Not Applicable	Requirement will be met. **Location on plans/spec:** M-201 thru M-204
C403.4.1.2 [FI38][1]	Thermostatic controls have a 5 °F deadband.	☐Complies ☐Does Not ☐Not Observable ☐Not Applicable	Requirement will be met. **Location on plans/spec:** Spec 23 55 70
C403.2.4.1.3 [FI20][1]	Temperature controls have setpoint overlap restrictions.	☐Complies ☐Does Not ☐Not Observable ☐Not Applicable	Requirement will be met. **Location on plans/spec:** Spec 23 55 70
C403.2.4.2 [FI39][1]	Each zone equipped with setback controls using automatic time clock or programmable control system.	☐Complies ☐Does Not ☐Not Observable ☐Not Applicable	Requirement will be met. **Location on plans/spec:** Spec 23 55 70
C403.2.4.2.1; C403.2.4.2.2 [FI40][1]	Automatic Controls: Setback to 55°F (heat) and 85°F (cool); 7-day clock, 2-hour occupant override, 10-hour backup	☐Complies ☐Does Not ☐Not Observable ☐Not Applicable	Requirement will be met. **Location on plans/spec:** Spec 23 55 70
C403.2.4.2.3 [FI41][1]	Systems include optimum start controls.	☐Complies ☐Does Not ☐Not Observable ☐Not Applicable	Requirement will be met. **Location on plans/spec:** Spec 23 55 70
C404.3 [FI11][1]	Heat traps installed on supply and discharge piping of non-circulating systems.	☐Complies ☐Does Not ☐Not Observable ☐Not Applicable	Requirement will be met. **Location on plans/spec:** P-601

1 High Impact (Tier 1) | 2 Medium Impact (Tier 2) | 3 Low Impact (Tier 3)

Section # & Req.ID	Final Inspection	Complies?	Comments/Assumptions
C404.4 [FI25][1]	All piping insulated in accordance with section details and Table C403.11.3.	☐Complies ☐Does Not ☐Not Observable ☐Not Applicable	Requirement will be met. **Location on plans/spec:** P-603
C404.6.1 [FI12][1]	Controls are installed that limit the operation of a recirculation pump installed to maintain temperature of a storage tank. System return pipe is a dedicated return pipe or a cold water supply pipe.	☐Complies ☐Does Not ☐Not Observable ☐Not Applicable	Requirement will be met.
C405.4.1 [FI18][1]	Interior installed lamp and fixture lighting power is consistent with what is shown on the approved lighting plans, demonstrating proposed watts are less than or equal to allowed watts.	☐Complies ☐Does Not ☐Not Observable ☐Not Applicable	*See the Interior Lighting fixture schedule for values.*
C405.5.1 [FI19][1]	Exterior lighting power is consistent with what is shown on the approved lighting plans, demonstrating proposed watts are less than or equal to allowed watts.	☐Complies ☐Does Not ☐Not Observable ☐Not Applicable	*See the Exterior Lighting fixture schedule for values.*
C408.2.1 [FI28][1]	Commissioning plan developed by registered design professional or approved agency.	☐Complies ☐Does Not ☐Not Observable ☐Not Applicable	Requirement will be met.
C408.2.3.1 [FI31][1]	HVAC equipment has been tested to ensure proper operation.	☐Complies ☐Does Not ☐Not Observable ☐Not Applicable	Requirement will be met.
C408.2.3.2 [FI10][1]	HVAC control systems have been tested to ensure proper operation, calibration and adjustment of controls.	☐Complies ☐Does Not ☐Not Observable ☐Not Applicable	Requirement will be met.
C408.2.3.3 [FI32][1]	Economizers have been tested to ensure proper operation.	☐Complies ☐Does Not ☐Not Observable ☐Not Applicable	Requirement will be met.
C408.2.4 [FI29][1]	Preliminary commissioning report completed and certified by registered design professional or approved agency.	☐Complies ☐Does Not ☐Not Observable ☐Not Applicable	Requirement will be met.
C408.2.5.1 [FI7][1]	Furnished HVAC as-built drawings submitted within 90 days of system acceptance.	☐Complies ☐Does Not ☐Not Observable ☐Not Applicable	Requirement will be met.
C408.2.5.1 [FI16][1]	Furnished as-built drawings for electric power systems within 90 days of system acceptance.	☐Complies ☐Does Not ☐Not Observable ☐Not Applicable	Requirement will be met.
C408.2.5.3 [FI43][1]	An air and/or hydronic system balancing report is provided for HVAC systems.	☐Complies ☐Does Not ☐Not Observable ☐Not Applicable	Requirement will be met.

1 High Impact (Tier 1) | 2 Medium Impact (Tier 2) | 3 Low Impact (Tier 3)

Section # & Req.ID	Final Inspection	Complies?	Comments/Assumptions
C408.2.5.4 [FI30][1]	Final commissioning report due to building owner within 90 days of receipt of certificate of occupancy.	☐Complies ☐Does Not ☐Not Observable ☐Not Applicable	Requirement will be met.
C408.3 [FI33][1]	Lighting systems have been tested to ensure proper calibration, adjustment, programming, and operation.	☐Complies ☐Does Not ☐Not Observable ☐Not Applicable	Requirement will be met.

Additional Comments/Assumptions:

1 High Impact (Tier 1) | 2 Medium Impact (Tier 2) | 3 Low Impact (Tier 3)

ONEIDA COUNTY NEW YORK 1798

MVCC
MOHAWK VALLEY COMMUNITY COLLEGE

1101 SHERMAN DRIVE
UTICA, NY 13501
(315) 792-5400

ARCHITECT:

MARCH ASSOCIATES
ARCHITECTS & PLANNERS, P.C.
258 Genesee Street, Suite 300
Utica, New York 13501
315 733 3344

Mitchell Giurgola
Mitchell Giurgola Architects LLP
630 Ninth Avenue, Suite 711
New York, New York 10036
212 663 4000

STRUCTURAL ENGINEER:
Interactive Engineering Solutions, PC
1721 Black River Blvd, Suite L-1
Rome, NY 13440
315 339 7855

MEP ENGINEER:
Towne Engineering
18 South Street
Utica, NY 13501
315 733 9000

SITE | CIVIL ENGINEER:
Appel Osborne Landscape Architecture
102 West Division Street, Suite 100
Syracuse, NY 13204
315 476 1022

SEAL:

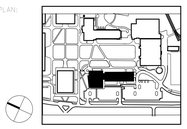
MATTHEW E. WEEKS 039779 REGISTERED ARCHITECT STATE OF NEW YORK

EXPIRATION DATE: 05-31-2028

ISSUE/REVISION:		
NO.	DATE	COMMENTS
1	09/23/25	PERMIT & CONSTRUCTION

EXPIRATION OF A PREVIOUSLY ISSUED ARCHITECT'S SEAL DOES NOT AND EXISTING CONDITIONS SHALL BE VERIFIED AND VERIFIED BY THE CONTRACTOR BEFORE PROCEEDING WITH THE WORK.

KEY PLAN:



PROJECT:

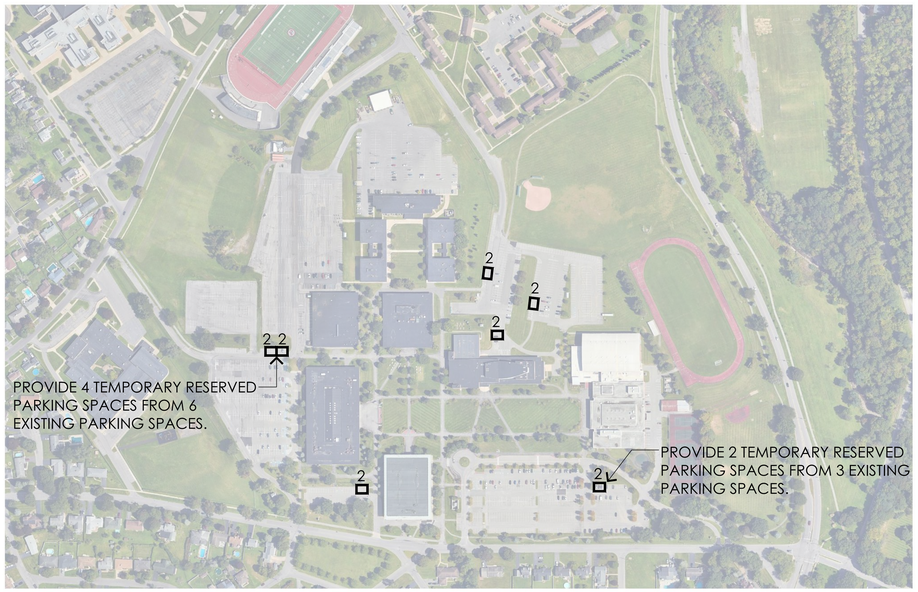
SCIENCE & TECHNOLOGY BUILDING

DRAWING TITLE:

COMCHECK INSPECTION CHECKLISTS

PROJECT NO: 23000 | DATE: 9/23/2025
PHASE: REBID & CONSTRUCTION | SCALE:

EN-102

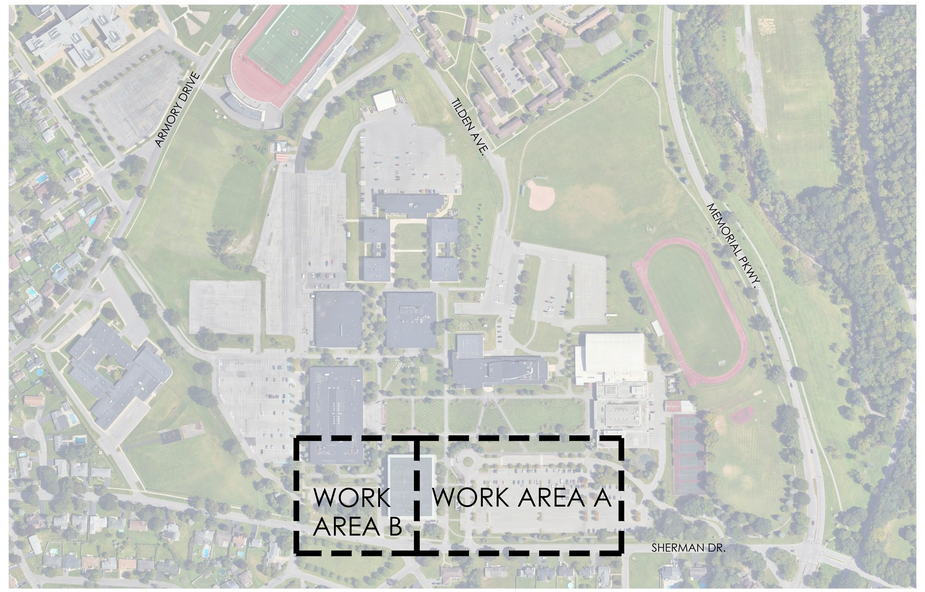


TEMPORARY RESERVED PARKING SPACES

0 100 200 400 600

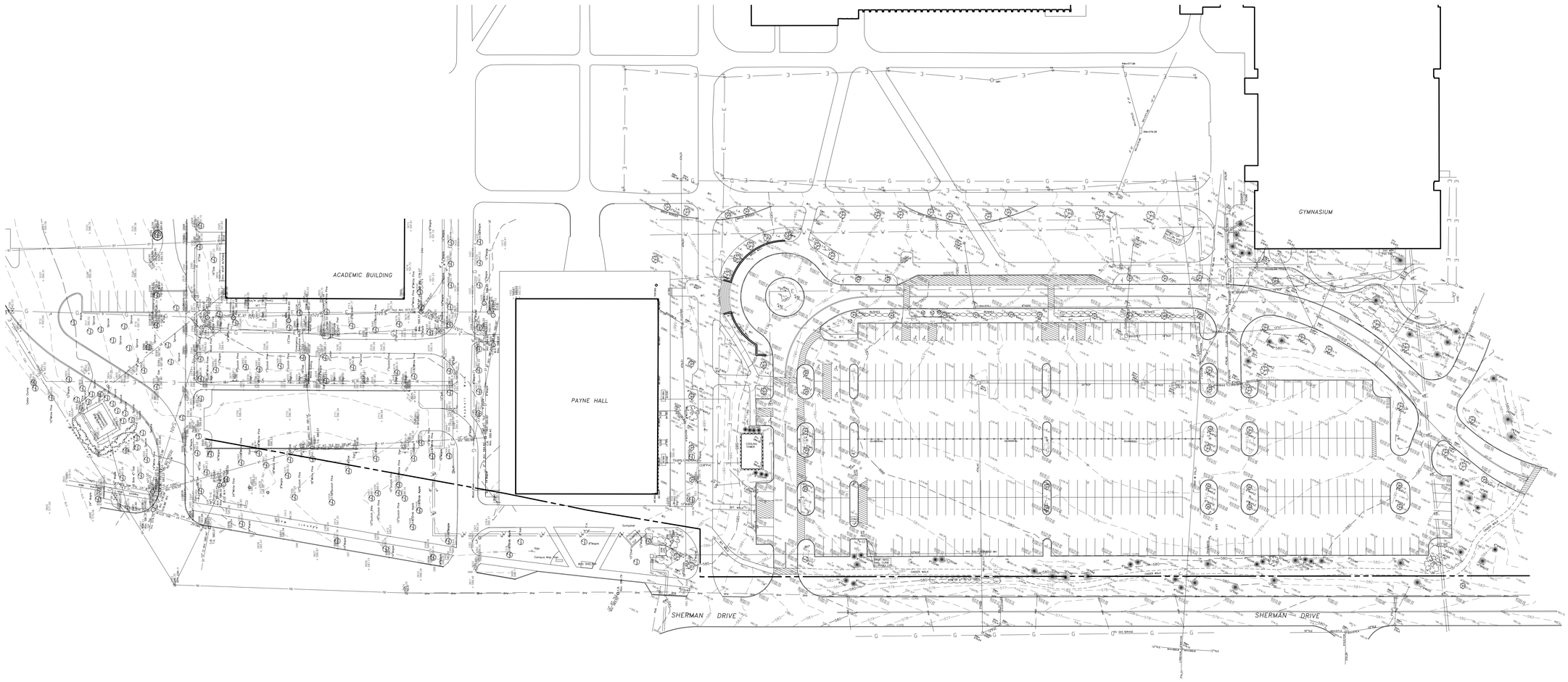
NOTES

- PROVIDE 14 TEMPORARY RESERVED PARKING SPACES IN EXISTING PARKING AREAS AS SHOWN.
- FIELD VERIFY ALL UNDERGROUND UTILITIES BEFORE INSTALLING SIGN POSTS.
- FINAL LOCATIONS TO BE APPROVED BY OWNER.



CAMPUS MAP

0 100 200 400 600



MVCC - SITE SURVEY

0 15 30 60 90
SCALE IN FEET

ONEIDA COUNTY 1798 NEW YORK

MVCC
MOHAWK VALLEY COMMUNITY COLLEGE

1101 SHERMAN DRIVE
UTICA, NY 13501
(315) 792-5400

ARCHITECT:

MARCH ASSOCIATES
ARCHITECTS & PLANNERS, PC
258 Genesee Street, Suite 300
Utica, New York 13501
315 733 3344

Mitchell Giurgola
Mitchell Giurgola Architects LLP
630 Ninth Avenue, Suite 711
New York, New York 10036
212 663 4000

STRUCTURAL ENGINEER:
Interactive Engineering Solutions, PC
1721 Black River Blvd, Suite L-1
Rome, NY 13440
315 339 7855

MEP ENGINEER:
Towne Engineering
18 South Street
Utica, NY 13501
315 733 9000

SITE | CIVIL ENGINEER:
Appel Osborne Landscape Architecture
102 West Division Street, Suite 100
Syracuse, NY 13204
315 476 1022

SEAL:

REGISTERED LANDSCAPE ARCHITECT
VINCENT PAUL PIETRUSKI
001287
STATE OF NEW YORK

Registration current through: 8/31/2026

ISSUE/REVISIONS:

NO.	DATE	COMMENTS
1	9/23/25	REBID & CONSTRUCTION

COPYRIGHT © 2025 - MCCANN LANDSCAPE ARCHITECTURE
ALL DRAWINGS AND DRAWING CONFORMS SHALL BE CHECKED AND VERIFIED BY THE CONTRACTOR BEFORE PROCEEDING WITH THE WORK.

KEY PLAN:

PLAN NORTH

PROJECT:

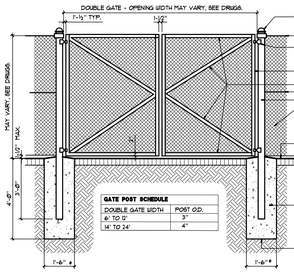
S & T BUILDING REPLACEMENT

DRAWING TITLE:

SITE SURVEY

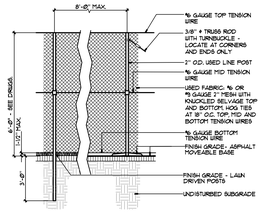
PROJECT NO: 23000	DATE: 9/23/2025
PHASE: REBID & CONSTRUCTION	SCALE: As Indicated

C-100



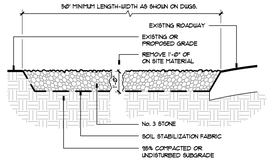
C101 TEMP. CONSTRUCTION FENCE GATE- DOUBLE WIDTH
SECTION • NOT TO SCALE 219-0101B
© APPEL OSBORNE LANDSCAPE ARCHITECTURE

C101 TEMPORARY CONSTRUCTION MATTE
SECTION • NOT TO SCALE CONSTRUCTION MATTE
© APPEL OSBORNE LANDSCAPE ARCHITECTURE

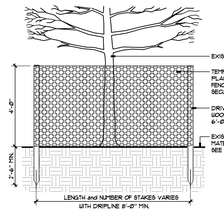


NOTE: CONTRACTOR TO USE MOVEABLE BASES (STANCHION) ALONG CURB EDGE ON PAVEMENT AND DRIVE IN POSTS IN LAIN AREA.

C101 TEMPORARY CONSTRUCTION FENCE
SECTION • NOT TO SCALE 219-0101B
© APPEL OSBORNE LANDSCAPE ARCHITECTURE

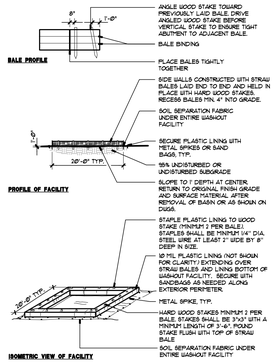


C101 OFFSITE SEDIMENT TRACKING CONTROL TYPE 1
SECTION • NOT TO SCALE 305-001
© APPEL OSBORNE LANDSCAPE ARCHITECTURE

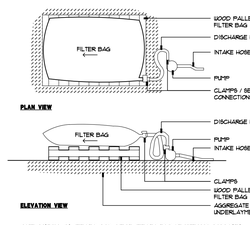


NOTES:
1. PLACE TREE GUARD AT DRIP LINE OF TREE (END OF BRANCHES) MIN. 4' FROM ¢ OF TRUNK.
2. MEDIUM/LARGE TREES - CONSTRUCT AS POLYGON AROUND DRIP LINE.
3. SMALL TREES - CONSTRUCT AS SQUARE AROUND DRIP LINE OR MIN. 4' FROM ¢ OF TRUNK, WHICHEVER IS GREATER.

C101 TEMPORARY TREE PROTECTION - FENCE
SECTION • NOT TO SCALE 305-007A
© APPEL OSBORNE LANDSCAPE ARCHITECTURE

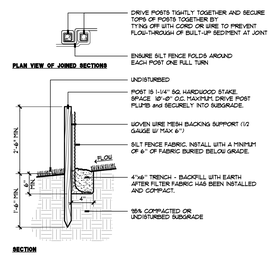


C101 TEMPORARY CONCRETE WASHOUT FACILITY - CWF
SECTION • NOT TO SCALE 305-016
© APPEL OSBORNE LANDSCAPE ARCHITECTURE

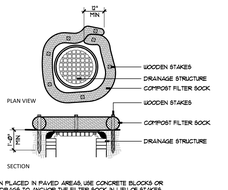


NOTE: INSTALL AS NEEDED AND WHERE NEEDED FOR DEWATERING PURPOSES.

C101 TEMP. SEDIMENT FILTER BAG FOR PUMPED WATER
SECTION • NOT TO SCALE 305-018
© APPEL OSBORNE LANDSCAPE ARCHITECTURE



C101 SILT FENCE - SF
SECTION • NOT TO SCALE 305-004
© APPEL OSBORNE LANDSCAPE ARCHITECTURE

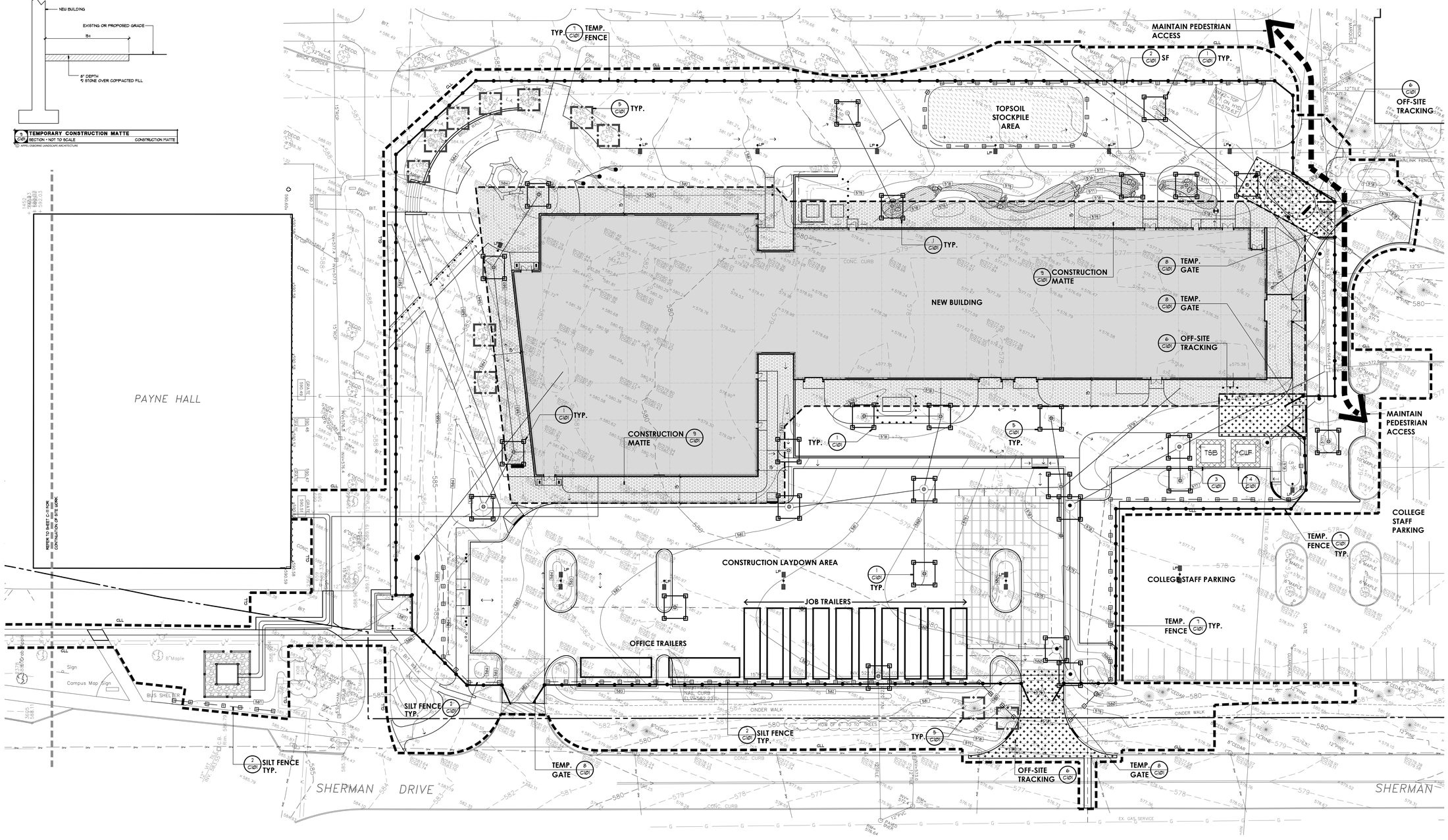


NOTES:
1. WHEN PLACED IN PAVED AREAS, USE CONCRETE BLOCKS OR SANDBAGS TO ANCHOR THE FILTER SOCK IN LIEU OF STAKES.

C101 STORM STRUCTURE PROTECTION
SECTION • NOT TO SCALE 305-001
© APPEL OSBORNE LANDSCAPE ARCHITECTURE

SWPPP LEGEND

SYMBOL	DESCRIPTION	SYMBOL	DESCRIPTION
	EXISTING CONTOUR	TSB	TEMPORARY SEDIMENT BASIN
	PROPOSED CONTOUR		TREE PROTECTION
SF	SILT FENCE		TEMPORARY CONSTRUCTION FENCE
	OFF SITE TRACKING CONTROL CONSTRUCTION ENTRY/EXIT		TOPSOIL STOCKPILE AREA
	TEMPORARY FABRIC INLET PROTECTION		CONSTRUCTION MATTE
CWF	CONCRETE WASHOUT FACILITY		



MVCC - STORM WATER POLLUTION PREVENTION PLAN

WORK AREA A

N

0 10 20 40 60
SCALE IN FEET

ONEIDA COUNTY NEW YORK 1798

MVCC
MOHAWK VALLEY COMMUNITY COLLEGE
1101 SHERMAN DRIVE
UTICA, NY 13501
(315) 792-5400

ARCHITECT:
MARCH ASSOCIATES
ARCHITECTS & PLANNERS, PC
258 Genesee Street, Suite 300
Utica, New York 13501
315 733 3344

Mitchell Giurgola
Mitchell Giurgola Architects LLP
630 Ninth Avenue, Suite 711
New York, New York 10036
212 663 4000

STRUCTURAL ENGINEER:
Interactive Engineering Solutions, PC
1721 Black River Blvd, Suite L-1
Rome, NY 13440
315 339 7855

MEP ENGINEER:
Towne Engineering
18 South Street
Utica, NY 13501
315 733 9000

SITE | CIVIL ENGINEER:
Appel Osborne Landscape Architecture
102 West Division Street, Suite 100
Syracuse, NY 13204
315 476 1022

SEAL:

STATE OF NEW YORK REGISTERED LANDSCAPE ARCHITECT VINCENT PAUL PETRUZZI 001287

Registration current through: 8/31/2026

ISSUE/REVISIONS:

NO.	DATE	COMMENTS
1	9/23/25	REBID & CONSTRUCTION

COPYRIGHT © MCMXCVI ALL RIGHTS ARE RESERVED. THE DRAWINGS AND DRAWING CONTENTS SHALL BE CHECKED AND VERIFIED BY THE CONTRACTOR BEFORE PROCEEDING WITH THE WORK.

KEY PLAN:

PLAN NORTH

PROJECT:
S & T BUILDING REPLACEMENT

DRAWING TITLE:
STORM WATER POLLUTION PREVENTION PLAN

PROJECT NO: 23000	DATE: 9/23/2025
PHASE: REBID & CONSTRUCTION	SCALE: As Indicated

C-101

STORMWATER POLLUTION PREVENTION PLAN NOTES

1. REGULATORY INFORMATION

This Stormwater Pollution Prevention Plan (SWPPP) is prepared to instruct personnel on mitigation measures to prevent pollutants in stormwater runoff from entering the waters of the United States. The following sections discuss and describe actions to be taken as part of the New York State Department of Environmental Conservation (NYSDEC) State Pollutant Discharge Elimination System (SPDES) General Permit for Stormwater Discharges from Construction Activities, Permit No. GP-0-20-001.

Appel Osborne Landscape Architecture (AOLA) has prepared this SWPPP on behalf of Oneida County Department of Public Works (OCDPW) and Mohawk Valley Community College (MVCC). The Engineer and the contractor(s) report to MVCC.

According to the SPDES General Permit for Stormwater Discharges from Construction Activities, projects involving installation of underground, linear utilities, demolition where no re-development is planned, and environmental enhancement projects such as stormwater retrofits, require the preparation of a SWPPP that only includes Erosion and Sediment Controls.

This SWPPP will include the overall development of the site, including the new Science and Technolgy Building, sitework, access drives, utilities, and landscaping.

2. SWPPP DEVELOPMENT, REVIEW AND UPDATE

2.1 SWPPP DEVELOPMENT

This SWPPP was developed in accordance with Permit No. GP-0-20-001 and accepted engineering practices.

2.2 SWPPP REVIEW

For construction activities that are subject to the requirements of a regulated, traditional land use control Municipal Separate Storm Sewer System (MS4), stormwater will be authorized to discharge from the project construction site after the New York State Department of Environmental Conservation (NYSDEC) receives a complete NOI and signed MS4 SWPPP Acceptance form.

- Five business days from the date the NYSDEC receives both a complete electronic version of the NOI (eNOI) and signed MS4 SWPPP Acceptance form, the NYSDEC will issue approval for construction activities on site.

The SWPPP will be kept current, and made available at the site for review by regulatory agencies, the Engineer, and contractors. Applicable Federal, State, and local regulatory agencies that have jurisdiction may elect to review this SWPPP and if necessary, may notify MVCC that the SWPPP requires modification or that certain site conditions do not meet the requirements of the regulations.

The SWPPP and NOI will also be made available for review by the public. OCDPW shall produce copies of the SWPPP and/or NOI for public individuals who submit a written request. The requester is responsible for copying costs.

2.3 SWPPP UPDATE

MVCC, the Engineer, or the contractors shall amend this SWPPP in the event there is a change in any of the following project components that have an effect on the potential for discharge of pollutants from stormwater runoff associated with construction activities:

- Design / Construction
  - In the event field conditions render the erosion and sediment control measures to be ineffective in minimizing sediment transport from stormwater discharges
  - Identification of new contractors that will implement or construct the stormwater management and/or erosion and sediment control facilities
  - Changed site conditions observed by OCDPW the Engineer or the contractors
- Operations / Maintenance

Should the SWPPP need to be revised based on changed site conditions observed by the Engineer and/or the Contractor, it shall be the responsibility of OCDPW to revise the SWPPP within seven days. If the changed site conditions are a result of work by a contractor, it shall be the contractor's responsibility to revise the SWPPP within seven days of notification from OCDPW and implement new SWPPP requirements at the contractor's own cost. All modifications shall be reviewed, approved and accepted by the Engineer prior to implementation.

The superseded SWPPP shall be marked as such and revision dates placed on the updated SWPPP and distributed by OCDPW or the contractors to the involved parties (i.e. subcontractors and Engineer).

3. SITE DESCRIPTION

3.1 PROJECT DESCRIPTION

The New Science and Technology Building is part of the Mohawk Valley Community College Campus in the City of Utica, approximately 94.19 acres. The portion of the project this SWPPP pertains to is a 3.96 acre parcel which includes the following work: 2 story, 61,945 GSF Classroom Building requiring excavation, utility connections, access drives, lawns and landscape improvements. The project site will displace an existing parking area. Cooling tower replacement, approximately 767 GSF and salt storage building, approximately 400 GSF.

3.2 SITE LOCATION AND OWNER/OPERATOR CONTACT INFORMATION

The project site is located in the City of Utica in Oneida County. The adjacent properties are primarily residential. The name and address of the Owner/Operator, including contact person and telephone number is:

OWNER:
Oneida County DPW
5999 Judd Road
Oriskany, NY 13424
P. 315-793-6213
F. 315-768-1122

CONTACT:
Matthew Baisley, Commissioner of Public Works
Phone: 315-768-6299
Email: mbaisley@ocgov.net

3.3 CONTRACT DOCUMENTS

The Contract Documents prepared by AOLA include Construction Drawings, this SWPPP, and Technical Specifications for site construction. The Contract Documents for building demolitions and geotechnical soil improvements are prepared by others. The documents provide the following information:

- Existing site features including the existing topographic contour elevations, known existing utilities, existing roadways, parking and landscape.
- Proposed site actions including earthwork, utility trenching and re-routing pavement removal, temporary contractor staging area, and temporary site access locations.
- Proposed location and type of stabilization and erosion and sediment control facilities to be implemented: silt fence, inlet protection, concrete washout facilities, temporary off-site tracking control, temporary seeding, straw matt and dust collector.
- Notes and details providing information on improvements proposed to be installed under this project.
- Extents of the SWPPP include Sherman Drive, college driveways, parking lots, walkways adjacent to the project site.
- Maintain Sherman Drive and surrounding neighborhood(s) free of dust and off-site tracking.

3.4 RECEIVING WATER

Stormwater flows from the site and new parking garage building draining to new existing storm water campus infrastructure to the memorial parkway R.o.w., which outlets to the starch factory creek, (a tributary of the Mohawk River).

3.5 SOILS

Soils data taken from the Natural Resource Conservation Service Web Soil Survey indicates that the soils in the project area are classified as all Urban Land. The soil is classified as 100% hydrologic group "D".

4. PROJECT IMPLEMENTATION AND CONSTRUCTION SEQUENCE

4.1 PRE-CONSTRUCTION REQUIREMENTS

The Owner/Operator and the Contractors shall follow the requirements described in Section 312501 - Erosion Control in the Project Manual prior to the commencement of any construction activities.

4.2 PROJECT REQUIREMENTS DURING CONSTRUCTION

The limits of disturbance for this project will be less than 5 acres. In the likely event that there will be disturbance of more than 5 acres at any one time, the following additional requirements are to be completed in advance of the actual disturbance:

- A written request is required and would be sent by OCDPW to the Regional NYSDEC office for an MS4
- Each written request shall include the following:
  - The increased disturbance limit.
  - The amount of area intended to be disturbed.
  - An explanation of why more than five acres needs to be disturbed.
  - Identification of any additional erosion and sediment control measures that will be implemented to mitigate the increased area of disturbance.
  - Acknowledgement that a "qualified inspector" will conduct at least two site inspections in accordance with Part IV.C of the NYSDEC GP-0-20-001 every seven calendar days as long as over five acres of soil remain disturbed. The two inspections shall be separated by a minimum of two full calendar days.
  - Acknowledgement that temporary and/or permanent soil stabilization measures shall be installed and/or implemented within seven days from the date soil disturbance activity has ceased. The soil stabilization measures shall be in conformance with the most current version of the New York State Standards and Specifications for Erosion and Sediment Control.
  - A phasing plan that defines maximum disturbed area per phase and shows required cuts and fills.
  - Acknowledgement that the Owner/Operator shall install additional site-specific practices needed to protect water quality.
  - If the increased amount of disturbance requires water quality controls, the written request shall identify which practices are proposed.
  - Updated SWPPP documents (as an attachment) identifying additional erosion and sediment control measures that will be implemented.

4.3 CONSTRUCTION SEQUENCE

The Contractors shall install erosion and sediment control practices, prior to upstream disturbance, to eliminate sediment transport to offsite areas. Unless specific approval has been obtained from the NYSDEC, the Contractors shall only disturb up to five acres at one time, which may require phasing of the construction to stabilize completed areas prior to disturbing additional areas. The general construction sequence is as follows:

- Install signs and traffic maintenance measures to ensure vehicles use a detour route around the project area.
- Install silt fencing
- Install storm drain inlet filters to existing inlets
- Install temporary construction access pavement and contractors' staging area
- Mill and/or remove existing roadway pavement, sidewalks or surfaces as indicated on Contract Drawings, removing material from site as appropriate
- Excavate utility trenches, stabilize trenches using temporary shoring, and demolish existing utilities, as displayed on Contract Drawings
- Install new and diverted utilities, including future connections, as displayed on Contract Drawings
- Remove temporary shoring, and fill and compact soil within trenches surrounding utilities
- Install building foundations / construct the new building.
- Install new pavements, curbs, walks and site features as indicated on the Contract Drawings.
- Connect building roof leaders / downspouts to drainage infrastructure.
- Restore and stabilize lawn areas. Install straw matte stabilization on slopes steeper than 1:3.
- After the construction period and final stabilization of the site, remove temporary erosion and sediment control measures
- Install final landscaping, including sod lawn, trees, shrubs and mulch.
- During periods of non-work (e.g., winter shut-down, if applicable), the site shall be temporarily stabilized in accordance with the NYSDEC GP-0-15-002.

4.4 INSPECTION DURING CONSTRUCTION

General

OCDPW will provide a "qualified inspector" to inspect the proposed erosion and sediment control measures and disturbed areas of the construction site for compliance with the SWPPP. The qualified inspector shall evaluate whether site-generated sediment is entering natural surface water bodies located within, or immediately adjacent to, the site boundaries. Digital photographs, with date stamp, shall be taken that show the condition of erosion and sediment control facilities and stormwater management practices that have been identified as needing corrective actions. Additional photographs shall be taken showing the condition of the facilities and practices after corrective actions have been performed. These photographs shall be attached to the inspection form within seven calendar days of the respective inspection.

These inspections are to be completed at least once every seven calendar days. There shall be a minimum of two full calendar days between inspections.

Prior to construction, the Contractors and subcontractors are to identify at least one "trained contractor" from respective company that will be responsible for the implementation of the SWPPP and the inspection of the erosion and sediment controls in accordance with the New York Standards and Specifications for Erosion & Sediment Control. OCDPW shall ensure that at least one trained contractor is on-site on a daily basis when soil disturbance activities are being performed.

If corrective action is required based on the results of inspection, the contractors will begin implementing the corrective action within one business day and complete it within seven calendar days following the date of the inspection. Additional mitigation measures are to be implemented by the contractors if warranted to minimize sediment transport or discharge of sediment laden runoff off-site. Each inspection report is to remain on file at the project site as part of the SWPPP.

Construction Shutdown

When soil disturbing activities have been temporarily suspended and temporary stabilization measures have been applied to all disturbed areas, OCDPW may reduce inspections to a minimum of one inspection every 30 calendar days. OCDPW shall notify the NYSDEC in writing prior to reducing the frequency of inspections. OCDPW shall resume inspections in accordance with this section as soon as soil disturbance activities resume.

Final Site Inspection

The qualified inspector shall perform a final inspection of the site to certify that:

- Construction is complete and disturbed areas have been stabilized, and;
- Temporary erosion and sediment control facilities have been removed.
- Dust control mitigation / procedures are acceptable to the owner.

Upon satisfactory completion of the final site inspection, the qualified inspector is required to sign the appropriate sections of the Notice of Termination (NOT) form and submit to OCDPW.

4.5 POST-CONSTRUCTION MAINTENANCE REQUIREMENTS

Once the project site is permanently stabilized, a Notice of Termination (NOT) shall be filed with the NYSDEC. The NOT requires certification from the inspector that the site has been stabilized. There is a permanent stormwater management facilities proposed for this project, and therefore there are post-construction maintenance requirements, (Downstream Defender Stormwater Separator) .

5. STORMWATER CONTROLS

The Construction Drawings illustrate anticipated locations for the erosion and sediment control facilities. These facilities are to be installed and maintained in accordance with the New York State Standards and Specifications for Erosion and Sediment Control (NYSDEC 2005), the Construction Drawings, and the manufacturer's instructions.

5.1 EROSION AND SEDIMENT CONSTROLS - STRUCTURAL PRACTICES

Proposed erosion and sediment control measures were designed in accordance with the following documents:

- New York State Standards and Specifications for Erosion and Sediment Control (NYSDEC 2005).
- NYSDEC State Pollutant Discharge Elimination System (SPDES) General Permit for Stormwater Discharges from Construction Activity (Permit No. GP-0-20-001, effective date January 2020).

As shown on the Construction Drawings, the site construction activities are both within the roadway rights-of- way, and within the interior of the site. The main potential sources for uncontrolled erosion and sediment are from pavement milling, saw cutting, utility trench excavation, trench backfilling, building and foundation excavation, and geotechnical soil improvements.

The control measures and best management practices (BMPs) noted below are to be implemented to mitigate and control potential pollutants and sediment transport in stormwater discharges from the construction site.

- Staging/laydown areas for vehicles and construction equipment are to be located on stabilized portions of the site. If needed, vehicles and equipment are to be washed down in stabilized areas prior to exiting the site.
- Storm drain inlet protection is to be installed around existing catch basins, as indicated on the Construction Drawings, to capture sediment runoff from the construction activities. Inlets within the right-of-way but outside the extents of construction are to have fabric filters installed if they are downstream of the construction activities, as shown on the Construction Drawings.
- If curbs are to be removed, replaced or repaired and there is potential for stormwater to drain from the roadway onto adjacent property, silt fence shall be installed along the downstream portion of the right-of- way.
- Silt fence shall also be installed surrounding spoil piles and stock piles, if they so exist. Erodible stockpiled materials shall not be placed on impervious surfaces unless covered in plastic or other approved material.

5.2 STABILIZATION PRACTICES

The Contractors shall initiate stabilization measures in accordance with the Contract Documents as soon as practicable. For portions of the site where soil disturbance activities have temporarily or permanently ceased, stabilization measures must be implemented within 14 days of the conclusion of activities, or within seven days if authorized to exceed five acres of disturbance at one time. This requirement does not apply if the installation
of stabilization measures is precluded by snow cover or frozen ground conditions; however, measures shall be implemented as soon as practicable.

5.3 ADDITIONAL STORMWATER CONTROLS

The following are additional measures to be implemented by the responsible contractors at the site to minimize pollutant transport.

- Proper precautions are to be taken so that materials do not spill onto private or public thoroughfares. If materials are dropped onto these areas, they are to be swept clear or removed as soon as practicable so that they do not enter surface and subsurface drainage systems.
- Dust control measures shall be provided before dust migrates off site. Measures may include water application or mulching, but shall not include use of chemical additives.
- Solid waste disposal dumpsters and containers are to be covered and emptied regularly. Waste is to be disposed of properly in accordance with local, state, and/or federal regulations.
- Portable toilets are to be installed and cleaned regularly with their contents properly disposed of. Portable toilets shall be located so that they will not be impacted by construction activities.
- Building materials are to be properly stored and contained on site.
- Oil containers are to have appropriate secondary containment. If total oil storage on site exceeds a cumulative total of 1,320-gallons, a spill prevention control and countermeasure (SPCC) plan is to be prepared by the owner of the stored oil. The SPCC shall be maintained on site.

5.4 DEVIATIONS FROM STORMWATER REQUIREMENTS

OCDPW is making no deviations from New York State Standards and Specifications for Erosion and Sediment Control (NYSDEC 2005). If any deviations were to occur, the contractors would contact OCDPW, changes would be made in the SWPPP, and the NYSDEC would be notified. Per direction from the NYSDEC, specification of this practice provides the NYSDEC a 60-day opportunity to review the SWPPP. The review period starts upon submission of the Notice of Intent document.

6. CONSTRUCTION OPERATIONS & MAINTENANCE

The procedures that are to be utilized to maintain the effectiveness of the erosion and sediment control measures during construction are described in Section 312501 - Erosion Control in the Project Manual.

7. NON-STORMWATER DISCHARGES

Contractors are responsible for controlling non-stormwater discharges. Non-stormwater discharges shall be controlled in the following manner:

- Cleaning construction vehicles and equipment is to be conducted on stabilized stone areas.
- Contractors are responsible for identifying areas on-site for construction vehicle transit (i.e., haul roads, contractor trailers and parking areas, etc.), and equipment staging if not identified on the Construction Drawings.
- Water used for dust control measures is to be applied using proper quantities and equipment. No chemical additives are to be used.

8. SPILL PREVENTION

The Contractors shall contact the NYSDEC Spill Hotline (1-800-457-7362) in the event a material spill occurs on site during construction. The following are material management practices that are to be used by the contractors to reduce the risk of spills or other accidental exposure of materials and substances to stormwater runoff during construction.

- Materials stored on site with potential for spillage are to be stored in a neat, orderly manner in their appropriate containers and, if possible, under a roof or other enclosure.
- Products are to be kept in their original containers with the original manufacturer's label.
- Substances are not to be mixed with one another unless recommended by the manufacturer.
- Whenever possible, products are to be used in full, or containers resealed before proper disposal of contents and containers off site.
- Manufacturers' recommendations for proper use and disposal are to be followed.
- Inspections are to be made to ensure proper use and disposal of materials.
- On site vehicles are to be monitored for leaks and receive regular preventative maintenance to reduce the chance of leakage of petroleum products. Petroleum products are to be stored in closed containers that are clearly labeled. Used oils are to be disposed of properly.
- Materials are to be brought on site in quantities that limit or minimize the amount of on-site storage.
- Paint containers are to be tightly sealed and properly stored when not in use. Excess paint, solvents, etc. shall not be discharged to storm sewer facilities but are to be properly disposed of according to manufacturers' instructions, or State and local regulations.

8.1 SPILL CONTROL PRACTICES

In addition to the material management practices discussed above, the following practices are to be followed by the contractors for spill control and cleanup.

- Spills of petroleum, toxins, or hazardous material are to be reported to the appropriate state or local government agencies immediately, regardless of size.
- Manufacturers' recommended methods for spill cleanup are to be clearly posted and site personnel are to be made aware of the procedures and the location of cleanup supplies.
- Materials and equipment necessary for spill cleanup are to be kept in designated material storage areas on site. Equipment and materials are to include but not be limited to brooms, dust pans, mops, rags, gloves, goggles, spill control materials, sand, sawdust, and trash containers specifically for this purpose.
- Spills are to be cleaned up immediately after discovery.
- The spill area is to be kept well ventilated, and personnel are to wear appropriate protective clothing to prevent injury from contact with hazardous substances.
- A spill report is to be completed and filed in this SWPPP and is to include a description of the spill, what caused it, and the corrective actions taken.

9. RETENTION OF RECORDS

The following documents are to be retained by MVCC and OCDPW for a period of five years from the date the site is permanently stabilized:

- Stormwater Pollution Prevention Plan (including the NOI, the NOI acknowledgement letter, and NOT)
- Contract Documents including Construction Drawings and Technical Specifications
- Inspection Reports by the Engineer/MVCC
- Contractors Certification(s)
- Correspondences regarding site specific project stormwater practices

10. MAINTENANCE

- When the site has been finally stabilized, the operator (owner) shall file with the NYSDEC a notice of termination, (NOT). SWPPP requirements / maintenance shall be the responsibility of the project contractor(s) until the project NOT has been filed.
- The operator (owner) shall provide long term maintencance of the storm water facilities after the NOT has been filed. Maintenance practices shall be conducted by the MVCC facilities department.

ONEIDA COUNTY NEW YORK 1798

MVCC
MOHAWK VALLEY COMMUNITY COLLEGE
1101 SHERMAN DRIVE
UTICA, NY 13501
(315) 792-5400

ARCHITECT:
MARCH ASSOCIATES ARCHITECTS & PLANNERS, PC
258 Genesee Street, Suite 300
Utica, New York 13501
315 733 3344

Mitchell Giurgola
Mitchell Giurgola Architects LLP
630 Ninth Avenue, Suite 711
New York, New York 10036
212 663 4000

STRUCTURAL ENGINEER:
Interactive Engineering Solutions, PC
1721 Black River Blvd, Suite L-1
Rome, NY 13440
315 339 7855

MEP ENGINEER:
Towne Engineering
18 South Street
Utica, NY 13501
315 733 9000

SITE | CIVIL ENGINEER:
Appel Osborne Landscape Architecture
102 West Division Street, Suite 100
Syracuse, NY 13204
315 476 1022

SEAL:

REGISTERED LANDSCAPE ARCHITECT — VINCENT PAUL PETRONE — 001287 — STATE OF NEW YORK

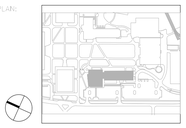
Registration current through: 8/31/2026

ISSUE/REVISIONS:

NO.	DATE	COMMENTS
1	9/23/25	REBID & CONSTRUCTION

COPYRIGHT © 2025 MITCHELL GIURGOLA ARCHITECTS LLP
ALL DRAWINGS AND DRAWING CONCEPTS SHALL BE CHECKED AND VERIFIED BY THE CONTRACTOR BEFORE PROCEEDING WITH THE WORK.

KEY PLAN:



PLAN NORTH

PROJECT:

S & T BUILDING REPLACEMENT

DRAWING TITLE:

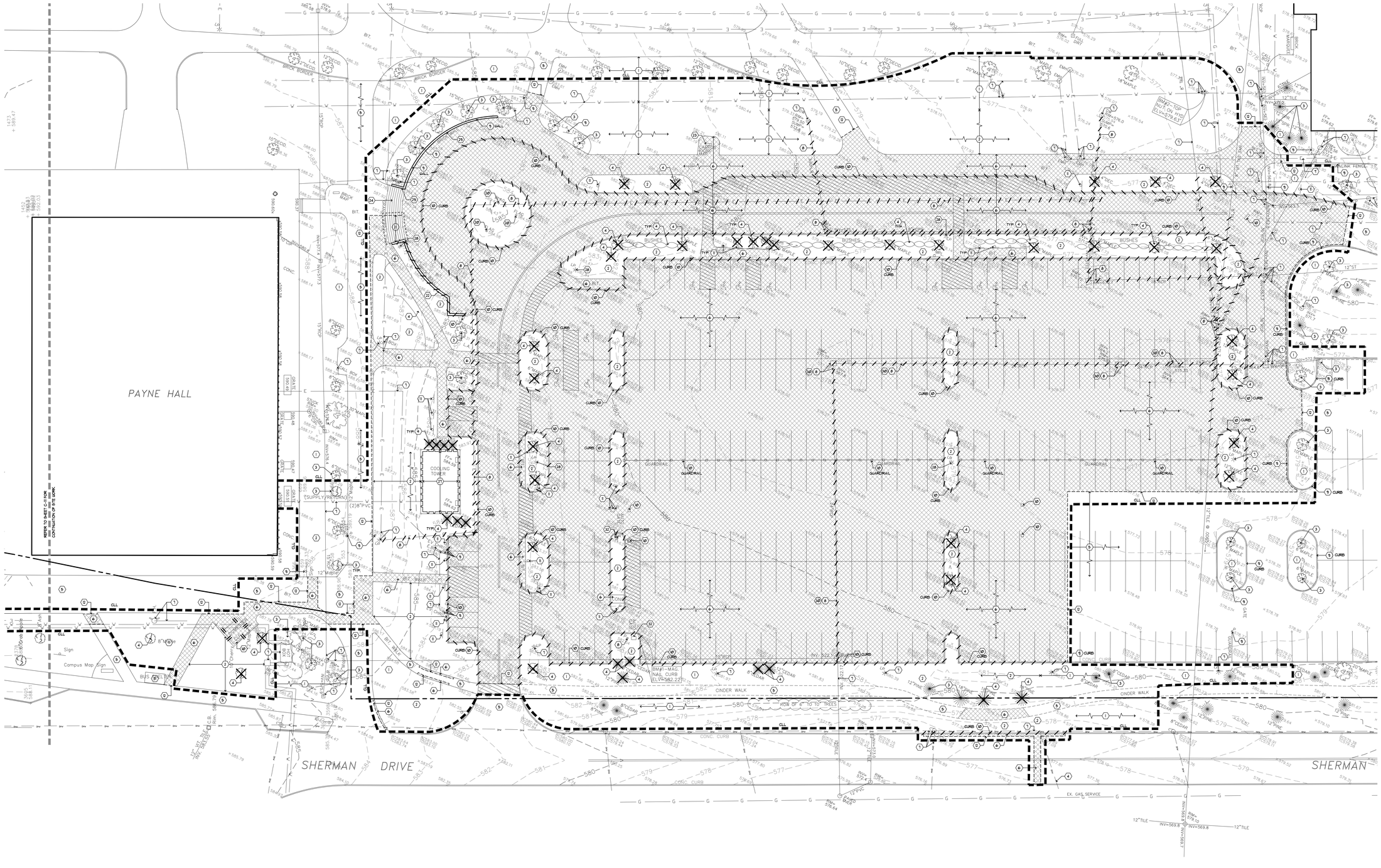
SWPPP NOTES

PROJECT NO: 23000	DATE: 9/23/2025
PHASE: REBID & CONSTRUCTION	SCALE: As indicated

C-102

SITE PREPARATION and CONSTRUCTION NOTES - MVCC

1. EXISTING LAWN AREA REMAINS. PROTECT.
2. STRIP EXISTING TOPSOIL AND STOCK PILE FOR REUSE ONSITE IN AN AREA AS SHOWN ON PLANS OR AS DIRECTED BY THE OWNER. TEMPORARILY SEED ENTIRE PILE IMMEDIATELY AND SURROUND WITH SILT FENCE.
3. EXISTING VEGETATION REMAINS. PROTECT AT ALL TIMES AS SHOWN ON THE PLANS AND AS SPECIFIED. DO NOT PARK VEHICLES/EQUIPMENT OR STORE MATERIALS WITHIN DRIP LINES OF TREES.
4. REMOVE EXISTING VEGETATION, INCLUDING ALL STUMPS AND ROOTS AND DISPOSE OFF SITE. BACKFILL VOID WITH IMPORTED GRANULAR MATERIAL COMPACTED TO MINIMUM 95% OF IN PLACE DRY DENSITY.
5. EXISTING PAVEMENT REMAINS. PROTECT. REPLACE ANY PAVEMENT DAMAGED DURING CONSTRUCTION OPERATIONS.
6. REMOVE EXISTING PAVEMENT SURFACE AND HAUL OFF SITE OR MILL AND USE AS GENERAL EARTH FILL WHEN MEETING SPECIFIED SIEVE REQUIREMENTS. REMOVE GRANULAR BASE COURSE AND HAUL OFF SITE OR USE AS GENERAL EARTH FILL WHEN MEETING SPECIFIED SIEVE REQUIREMENTS. MILLINGS MAY BE USED WITHIN THE BOTTOM 50% OF PROPOSED GRANULAR BASE COURSE AT NEW PAVEMENT AREAS, WHEN MEETING SIEVE REQUIREMENTS.
7. EXISTING SITE UTILITY REMAINS. PROTECT.
8. REMOVE EXISTING SITE UTILITY DISPOSE OFF SITE AND BACK FILL VOID WITH IMPORTED GRANULAR MATERIAL, COMPACTED TO MINIMUM 95% OF IN PLACE DRY DENSITY.
9. EXISTING SITE FEATURE REMAINS. PROTECT.
10. REMOVE EXISTING SITE FEATURE AND DISPOSE OFF SITE, INCLUDING ANY ASSOCIATED FOOTINGS OR UNDERDRAINS. BACKFILL VOID WITH IMPORTED GRANULAR MATERIAL COMPACTED TO 95% OF IN PLACE DRY DENSITY.
11. REMOVE EXISTING TRAFFIC SIGN AND RETURN TO OWNER.
12. SAW CUT NEAT, STRAIGHT EDGE PRIOR TO PAVING. AT CONCRETE SIDEWALKS REMOVE AT NEAREST SCORE JOINT.
13. VERIFY LOCATION, ELEVATION, INVERT AND TYPE OF EXISTING PIPE PRIOR TO CONSTRUCTION. NOTIFY LANDSCAPE ARCHITECT OF ANY DISCREPANCY WITH SURVEY OR PROPOSED WORK.
14. ADJUST UTILITY TO FINISHED GRADE.
15. MEET EXISTING LINE AND GRADE.
16. SLIP DOUEL NEW CONCRETE WALK INTO EXISTING CONCRETE WALK OR BUILDING FOUNDATION WALL WITH No. 4 SLIP DOUEL 18" LONG, 12" O.C., 2" CLEAR MINIMUM FROM SURFACE. INSERT DOUELS EQUAL LENGTH INTO EXISTING AND NEW CONCRETE. PROVIDE EXPANSION JOINT AND SEALANT.
17. ALIGN NEW EDGE WITH EXISTING.
18. CAP END SILT TIGHT.
19. PROVIDE HOT TAR ASPHALT CRACK SEALER BETWEEN EXISTING AND NEW ASPHALT JOINT.
20. REMOVE AND SALVAGE EXISTING FLAG POLES AND ACCESSORIES AND RETURN TO OWNER.
21. REMOVE AND SALVAGE EXISTING GRANITE STAIR TREADS AND STOCKPILE FOR REUSE. SALVAGE HANDRAILS AND RETURN TO OWNER. REMOVE CONCRETE SUB-SLAB AND FOUNDATION UNDER STEPS AND DISPOSE.
22. REMOVE AND DISPOSE EXISTING MASONRY WALL INCLUDING FOUNDATIONS AND DISPOSE. SALVAGE STOCKPILE AND CLEAN 100 SQUARE FEET OF FACE BRICK FOR PATCHING NEW WORK.
23. SALVAGE EXISTING MAP KIOSK SIGN AND REINSTALL AS SHOWN. REMOVE AND DISPOSE MASONRY BASE AND CONCRETE FOOTING.
24. EXISTING GRANITE STEPS AND HANDRAILS TO REMAIN. PROTECT.
25. MOUNT SIGNS ON BUILDING WALL WITH STAINLESS STEEL FASTENERS. FINAL PLACEMENT APPROVED BY ARCHITECT.
26. REMOVE AND STOCKPILE PORTION OF EXISTING CHAIN LINK FENCE TO ACCESS NEW WORK. REINSTALL FENCE MATCHING EXISTING CONDITIONS.
27. COOLING TOWER EQUIPMENT DISCONNECTED AND REMOVED BY OTHERS. REMOVE AND DISPOSE SCREEN WALLS AND UTILITY PADS. REMOVE FOUNDATIONS AND DISPOSE. IF ASBESTOS MATERIAL IS ENCOUNTERED, REMOVAL AND DISPOSAL WILL BE UNDER SPARATE CONTRACT. BACKFILL VOID WITH IMPORTED GRANULAR MATERIAL COMPACTED TO 95% OF IN-PLACE DRY DENSITY. REFER TO M.E.P. DWGS.
28. REMOVE AND RETURN LIGHT POLE TO OWNER. REMOVE AND DISPOSE CONCRETE POLE BASE AND BACKFILL WITH IMPORTED GRANULAR MATERIAL COMPACTED TO 95% OF IN-PLACE DRY DENSITY. ELECTRICAL CONTRACT TO VERIFY LIGHTING CIRCUIT AND DISCONNECT.
29. RE-POINT EXISTING MASONRY WALL WHERE DETERIORATED, INCLUDING SOFT OR LOOSE MORTAR, CRACKS, SEPARATION, OR WHERE EROSION EXCEEDS ¼". ASSUME 100 LINEAR FEET OF REPOINTING VERTICAL OR HORIZONTAL MORTAR JOINTS.
30. INSTALL NEW STORM WATER BI-PASS PIPING PRIOR TO REMOVAL OF EXISTING STORM SEWER. REFER TO SITE UTILITY PLAN.
31. EXISTING BUS SHELTER/STOP TO REMAIN ACTIVE THROUGHOUT CONSTRUCTION.
32. REMOVE AND DISPOSE TRAFFIC GATE AND EQUIPMENT, INCLUDING FOUNDATION. BACKFILL WITH IMPORTED GRANULAR MATERIAL AND COMPACT TO 95% OF IN-PLACE DRY DENSITY. ELECTRICAL CONTRACT TO VERIFY POWER CIRCUIT AND DISCONNECT.
33. SMITH BLAIR 662-086308080-2000, 8-INCH TAPPING WITH A FLANGED OUTLET SIZED FOR OUTLETS OF 8 INCHES AND 15 BUILT TO WITHSTAND A PRESSURE RATING OF UP TO 2000 PSI AND TEMPERATURE RATINGS OF 180 DEGREES FAHRENHEIT.
34. NEW WATER SERVICE SHALL BE DUCTILE IRON-RESTRAINED JOINT PIPE WITH FLEXIBLE RUBBER RING COMPRESSION-TYPE JOINT, AWWA C111, AWWA C151 AND WORKING PRESSURE OF 150 TO 350 PSI.
35. GATE VALVE AND BOX: VALVES SHALL BE 175-POUND FLANGED GATE VALVES MEETING AWWA STANDARDS, IRON BODY, BRONZE MOUNTED, DOUBLE DISC TYPE WITH REMOVABLE BRASS SEATS, NON-RISING MANGANESE BRONZE STEMS, AND OPEN COUNTERCLOCKWISE. VALVE BOX SHALL BE CAST IRON, YOKE TYPE, ADJUSTABLE FOR HEIGHT WITH CAST IRON COVER MARKED "WATER". BOXES SHALL BE DESIGNED FOR PIPE IN TRENCH HAVING A 5'-6" COVER OVER PIPE. STANDARD OF QUALITY SHALL BE KENNEDY OR APPROVED MUNICIPAL STANDARD.



MVCC - SITE PREPARATION PLAN

WORK AREA A

0 10 20 40 60
SCALE IN FEET

C-103

MOHAWK VALLEY COMMUNITY COLLEGE
1101 SHERMAN DRIVE
UTICA, NY 13501
(315) 792-5400

ARCHITECT:
MARCH ASSOCIATES ARCHITECTS & PLANNERS, PC
258 Genesee Street, Suite 300
Utica, New York 13501
315 733 3344

Mitchell Giurgola
Mitchell Giurgola Architects LLP
630 Ninth Avenue, Suite 711
New York, New York 10036
212 663 4000

STRUCTURAL ENGINEER:
Interactive Engineering Solutions, PC
1721 Black River Blvd, Suite L-1
Rome, NY 13440
315 339 7855

MEP ENGINEER:
Towne Engineering
18 South Street
Utica, NY 13501
315 733 9000

SITE | CIVIL ENGINEER:
Appel Osborne Landscape Architecture
102 West Division Street, Suite 100
Syracuse, NY 13204
315 476 1022

SEAL:
REGISTERED LANDSCAPE ARCHITECT
VINCENT PAUL PETRUZZI
001287
STATE OF NEW YORK
Registration current through: 8/31/2026

ISSUE/REVISION:

NO.	DATE	COMMENTS
1	9/23/25	REBID & CONSTRUCTION

COPYRIGHT © 2018 MITCHELL GIURGOLA ARCHITECTS LLP
THESE DRAWINGS ARE THE LEGAL PROPERTY OF MITCHELL GIURGOLA ARCHITECTS LLP. THEY ARE NOT TO BE USED, LOANED OR SHARED WITH ANYONE BY THE CONTRACTOR BEFORE PROCEEDING WITH THE WORK.

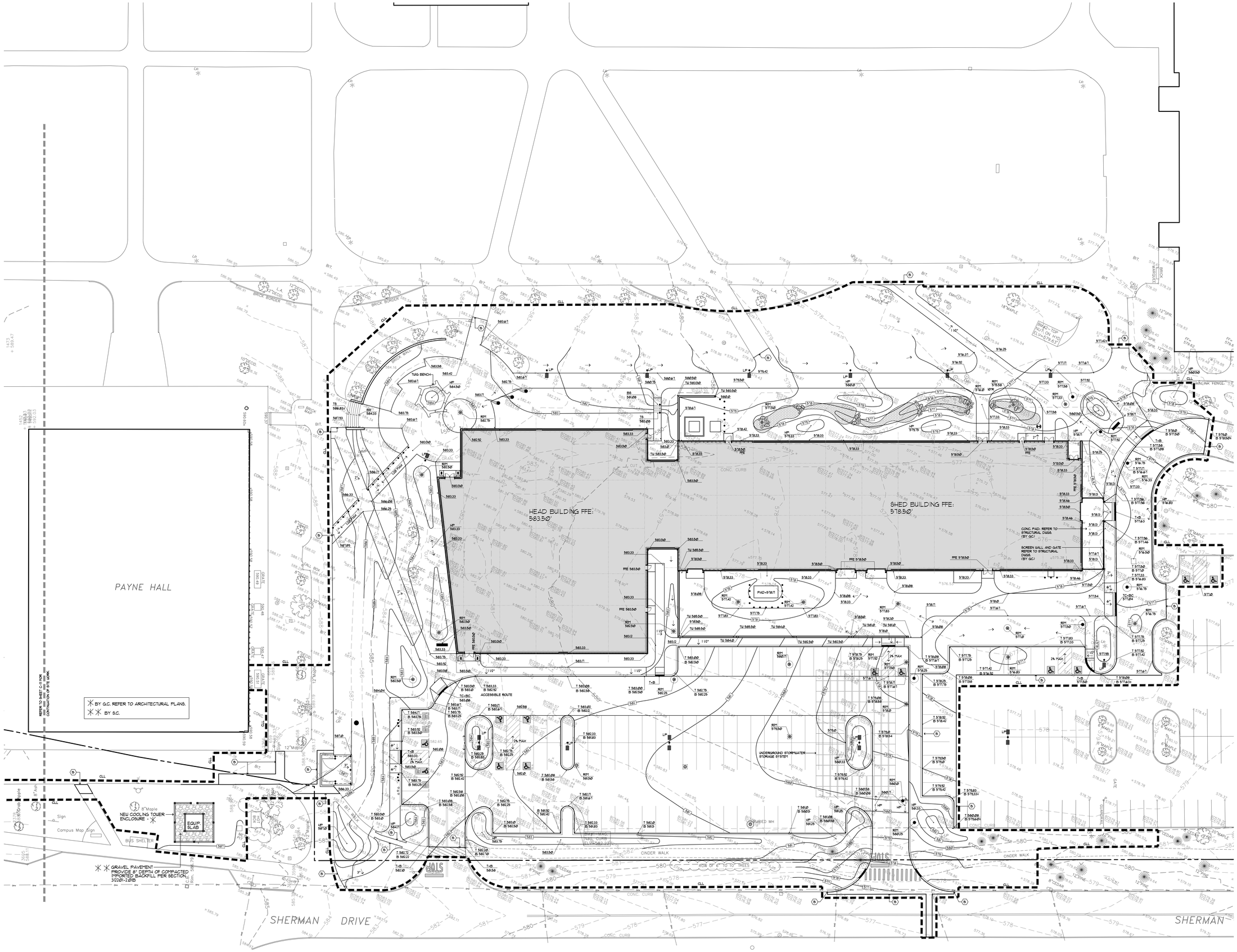
KEY PLAN:

PLAN NORTH

PROJECT:
S & T BUILDING REPLACEMENT

DRAWING TITLE:
SITE PREPARATION PLAN

PROJECT NO: 23000	DATE: 9/23/2025
PHASE: REBID & CONSTRUCTION	SCALE: As indicated



MVCC - SITE GRADING PLAN

WORK AREA A

0 10 20 40 60
SCALE IN FEET

ONEIDA COUNTY 1798 NEW YORK

MVCC
MOHAWK VALLEY COMMUNITY COLLEGE

1101 SHERMAN DRIVE
UTICA, NY 13501
(315) 792-5400

ARCHITECT:

MARCH ASSOCIATES
ARCHITECTS & PLANNERS, PC
258 Genesee Street, Suite 300
Utica, New York 13501
315 733 3344

Mitchell Giurgola
Mitchell Giurgola Architects LLP
630 Ninth Avenue, Suite 711
New York, New York 10036
212 663 4000

STRUCTURAL ENGINEER:
Interactive Engineering Solutions, PC
1721 Black River Blvd, Suite L-1
Rome, NY 13440
315 339 7855

MEP ENGINEER:
Towne Engineering
18 South Street
Utica, NY 13501
315 733 9000

SITE | CIVIL ENGINEER:
Appel Osborne Landscape Architecture
102 West Division Street, Suite 100
Syracuse, NY 13204
315 476 1022

SEAL:

STATE OF NEW YORK REGISTERED LANDSCAPE ARCHITECT VINCENT PAUL PETRONE 001287

Registration current through: 8/31/2026

ISSUE/REVISIONS:

NO.	DATE	COMMENTS
1	9/23/25	REBID & CONSTRUCTION

COPYRIGHT © 2025 MITCHELL GIURGOLA ARCHITECTS LLP
ALL RIGHTS RESERVED. THESE DRAWINGS SHALL BE CARRIED OUT AND ARRIED BY THE CONTRACTOR BEFORE PROCEEDING WITH THE WORK.

KEY PLAN:

PLAN NORTH

PROJECT:

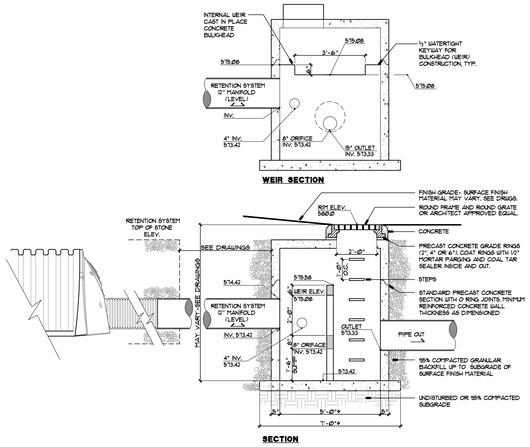
S & T BUILDING REPLACEMENT

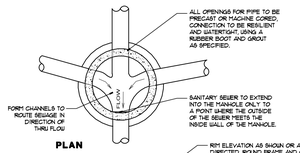
DRAWING TITLE:

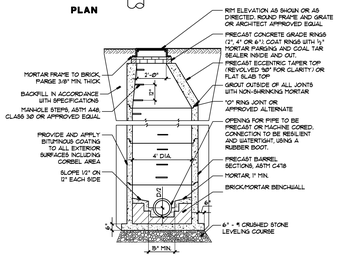
SITE GRADING PLAN

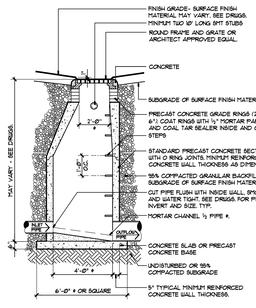
PROJECT NO: 23000	DATE: 9/23/2025
PHASE: REBID & CONSTRUCTION	SCALE: As Indicated

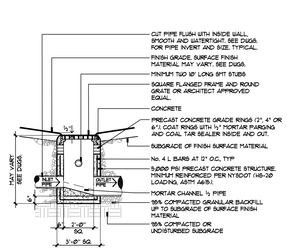
C-104

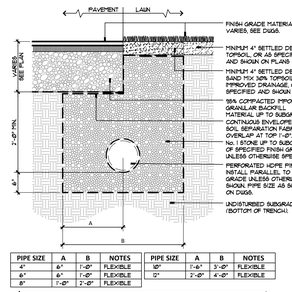


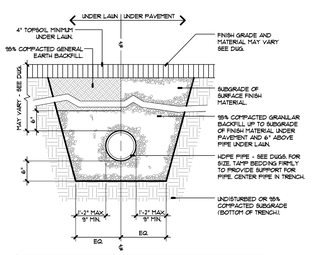


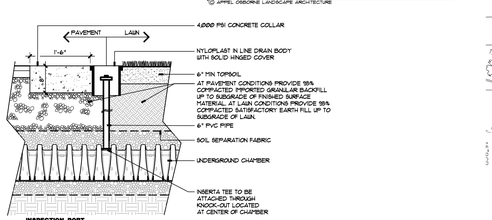


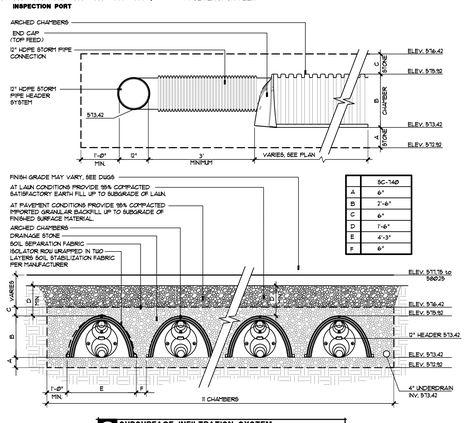


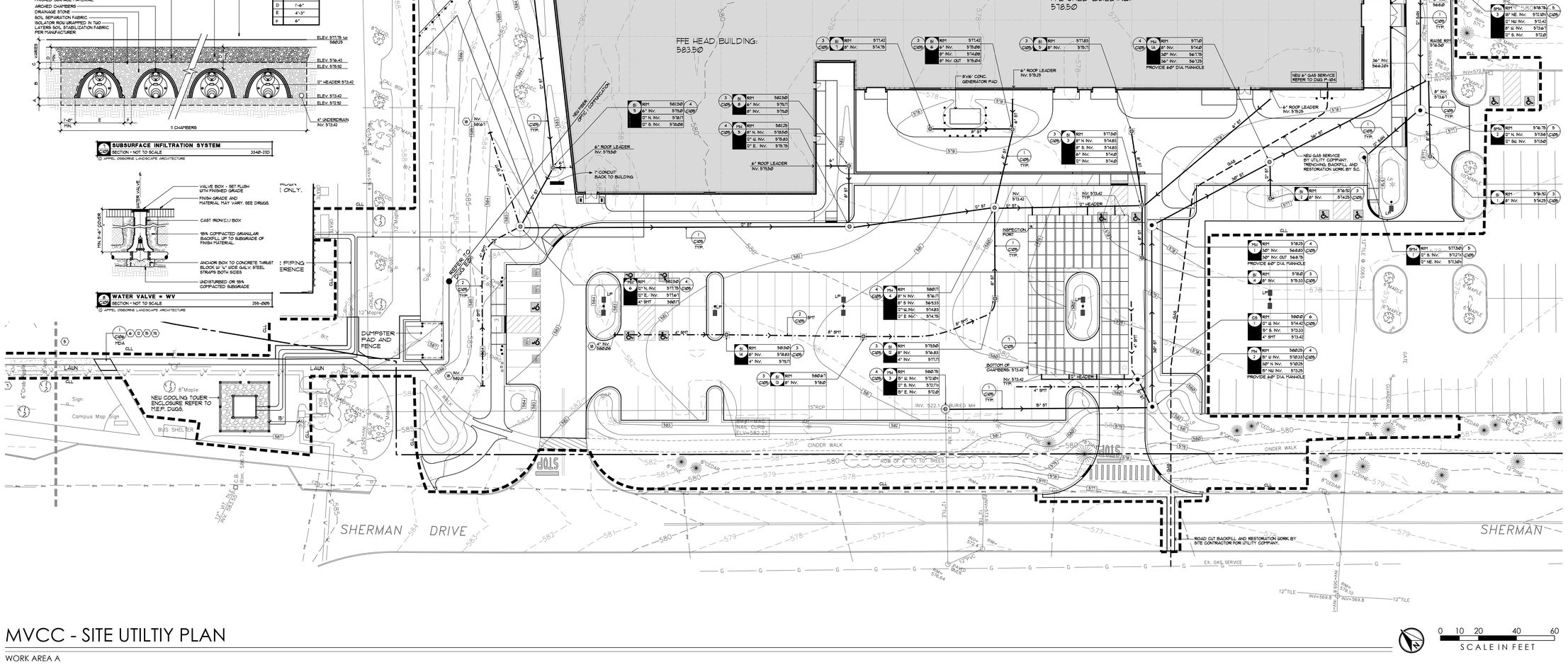










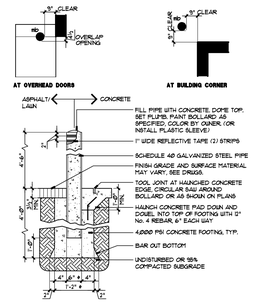

FFE SHED BUILDING: 578.50
FFE HEAD BUILDING: 583.50
DUMPSTER PAD AND FENCE
NEW COOLING TOWER ENCLOSURE REFER TO M.E.P. DWGS.
Sign
Campus Map Sign
BUS SHELTER
8"Maple
SHERMAN DRIVE
CINDER WALK
BUILT-UP CURB
ROW OF 6" TO 10" TREES
BURIED MH
INV. 522.1
BOTTOM OF CHAMBERS 573.42
INV. 573.42
12" HEADER
INSPECTION PORT
OPTION A
12'ST
BIO-RETENTION
DRY SWALE
6" ROOF LEADER INV. 574.50
6" ROOF LEADER INV. 575.25
6" ROOF LEADER INV. 575.29
6" ROOF LEADER INV. 575.50
6" ROOF LEADER INV. 575.00
1" CONDUIT BACK TO BUILDING
8'x16' CONC. GENERATOR PAD
NEW GAS SERVICE REFER TO DWG P-104
NEW GAS SERVICE BY UTILITY COMPANY. TRENCHING, BACKFILL AND RESTORATION WORK BY S.C.
ROAD CUT BACKFILL AND RESTORATION WORK BY SITE CONTRACTOR FOR UTILITY COMPANY.
EX. GAS SERVICE
SAN MH RIM 577.92
BLDG. SAN INV. 574.0
RAISE RIM 579.50
36" INV. 566.20
PROVIDE 60" DIA MANHOLE
BEEHIVE STYLE GRATE
4'x4' SITE INV. 574.29
4" INV. 576.71
4" INV. 580.20
4" INV. 576.18
4" INV. 580.29
4" INV. 580.79
4" INV. 581.29
4" INV. 581.79
4" INV. 582.29
4" INV. 582.79
4" INV. 583.29
4" INV. 583.79
4" INV. 584.29
4" INV. 584.79
4" INV. 585.29
4" INV. 585.79
4" INV. 586.29
4" INV.

PARKING SUMMARY (SHERMAN DRIVE LOT ONLY)

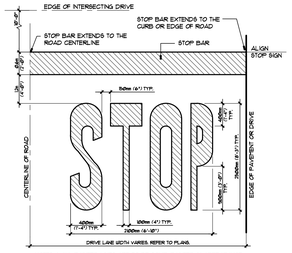
	TOTAL	ACCESSIBLE REQUIRED	ACCESSIBLE PROVIDED	EV
EXISTING	434	9	14 X	4
PROPOSED	242	7	12	4 X X

X 14 TEMPORARY ACCESSIBLE SPACES TO BE PROVIDED ELSEWHERE ON CAMPUS DURING CONSTRUCTION PERIOD.

X X 1 EV SPACE DESIGNATED AS ACCESSIBLE.



1 C106 METAL BOLLARD=MB
SECTION • NOT TO SCALE 3230-B06-A
© APPEL OSBORNE LANDSCAPE ARCHITECTURE



NOTES: 1. ALL PAINTED LINES ARE TO BE SOLID PAINTED IN APPEARANCE AND CONFORM TO NYSDOT STANDARDS.
2. COLOR SHALL BE WHITE. TWO COATS AS SPECIFIED.
3. CENTER ENTIRE SYMBOL IN DRIVE LANE
4. LAYOUT ALL MARKINGS IN FIELD AND OBTAIN APPROVAL FROM OWNER AND ARCHITECT PRIOR TO PAINTING.
5. TEXT MARKING "STOP" SHALL BE CENTERED ON STOP BAR.
6. ALL PAVEMENT MARKINGS SHALL BE PLACED IN ACCORDANCE WITH THE NYS MANUAL OF UNIFORM TRAFFIC CONTROL DEVICES (NYSTCD.)

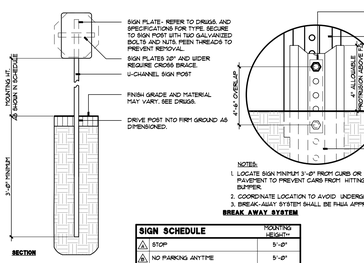
10 C106 PAVEMENT MARKING - STOP BAR AND TEXT
PLAN • NOT TO SCALE 3230-B12
© APPEL OSBORNE LANDSCAPE ARCHITECTURE

NOTE 4 - CENTERLINE OF PAINTED LINES AS SHOWN ON LAYOUT DRWGS.

9 C106 PARKING STALL MARKING-TYPICAL
SECTION • NOT TO SCALE 3230-B09A
© APPEL OSBORNE LANDSCAPE ARCHITECTURE

NOTE 4 - CENTERLINE OF PAINTED LINES AS SHOWN ON LAYOUT DRWGS.

8 C106 EVC PARKING STALL MARKING-TYPICAL
SECTION • ¾"=1'-0" 3230-B12A
© APPEL OSBORNE LANDSCAPE ARCHITECTURE



NOTES:
1. LOCATE SIGN MINIMUM 3'-0" FROM CURB OR EDGE OF PAVEMENT TO PREVENT CARS FROM HITTING SIGN POST WITH BUMPER.
2. COORDINATE LOCATION TO AVOID UNDERGROUND UTILITIES.
3. BREAK-AWAY SYSTEM SHALL BE FHWA APPROVED.

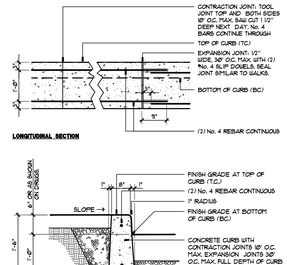
BREAK AWAY SYSTEM

SIGN SCHEDULE

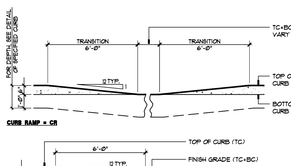
	MOUNTING HEIGHT=
STOP	5'-0"
NO PARKING ANYTIME	5'-0"
RESERVE PARKING	7'-0"
ELECTRIC VEHICLE ONLY	7'-0"
VISITOR PARKING ONLY	7'-0"
EMPLOYEE PARKING ONLY	7'-0"

*ALL DIMENSIONS ARE TO BOTTOM OF SIGN PLATE.

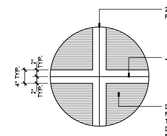
7 C106 TRAFFIC SIGN
SECTION • NOT TO SCALE 3230-B03A
© APPEL OSBORNE LANDSCAPE ARCHITECTURE



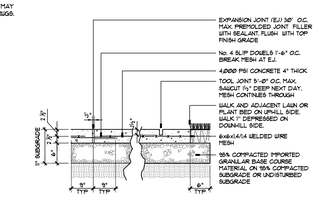
6 C106 NYSDOT - SLIP FORMED CONCRETE CURB
SECTION • NOT TO SCALE 3213-B06
© APPEL OSBORNE LANDSCAPE ARCHITECTURE



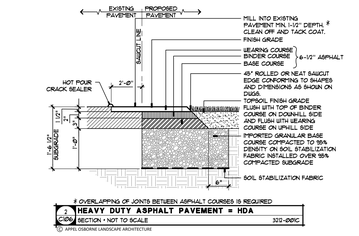
5 C106 CURB RAMP AND CURB ENDING = CR/CE
SECTION • NOT TO SCALE 3213-B01
© APPEL OSBORNE LANDSCAPE ARCHITECTURE



4 C106 CONCRETE WALK AND FINISHED PAD
SECTION • NOT TO SCALE 3213-261
© APPEL OSBORNE LANDSCAPE ARCHITECTURE

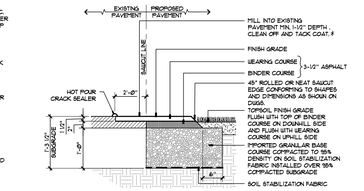


3 C106 CONCRETE WALK - STANDARD 6"
SECTION • NOT TO SCALE 3213-260
© APPEL OSBORNE LANDSCAPE ARCHITECTURE



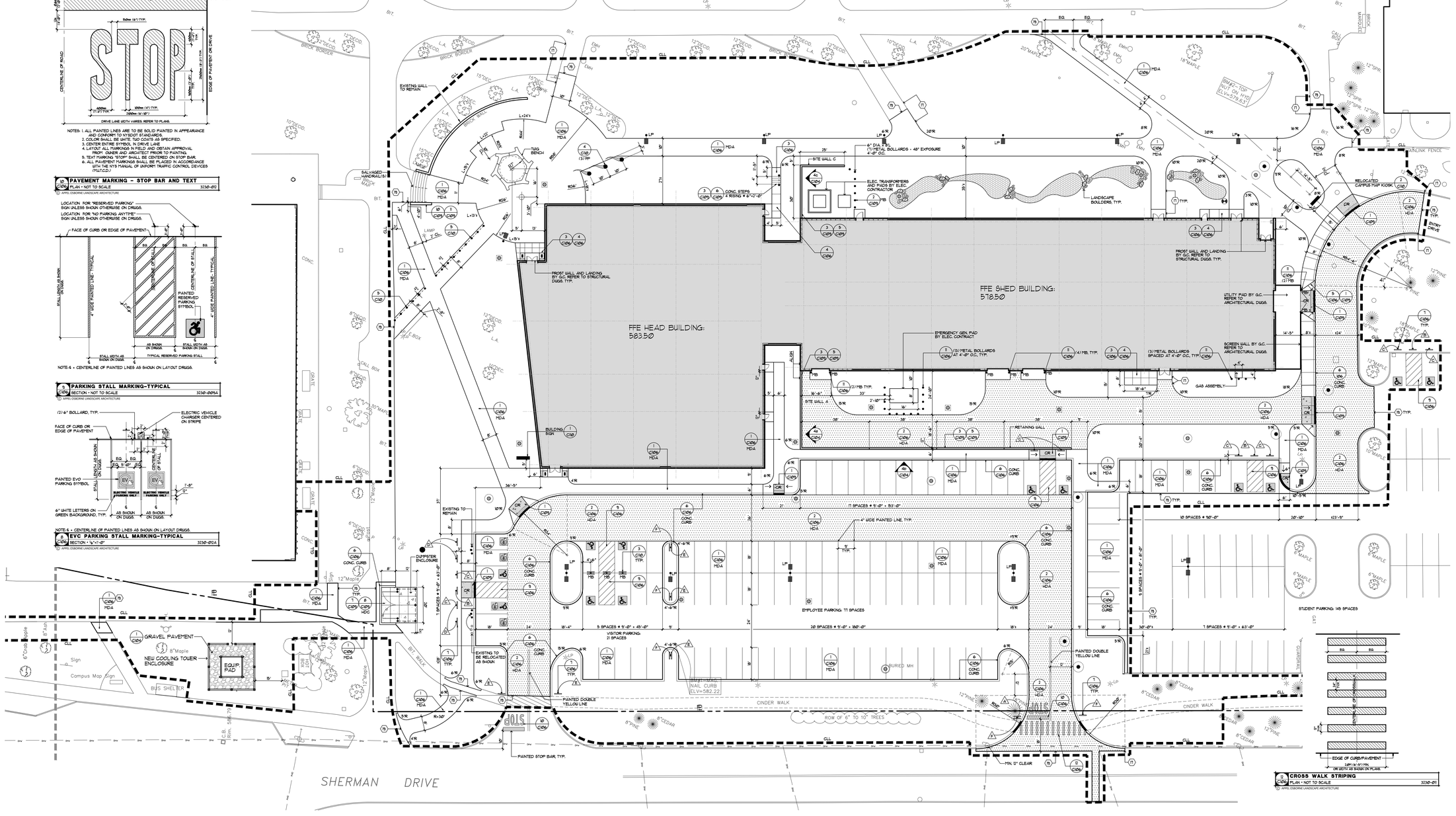
OVERLAPPING OF JOINTS BETWEEN ASPHALT COURSES IS REQUIRED.

2 C106 HEAVY DUTY ASPHALT PAVEMENT = HDA
SECTION • NOT TO SCALE 3212-B01C
© APPEL OSBORNE LANDSCAPE ARCHITECTURE



OVERLAPPING OF JOINTS BETWEEN ASPHALT COURSES IS REQUIRED.

1 C106 MEDIUM DUTY ASPHALT PAVEMENT = MDA
SECTION • NOT TO SCALE 3212-B01B
© APPEL OSBORNE LANDSCAPE ARCHITECTURE



9 C106 CROSS WALK STRIPING
PLAN • NOT TO SCALE 3230-B11
© APPEL OSBORNE LANDSCAPE ARCHITECTURE

MVCC - SITE LAYOUT PLAN

WORK AREA A

0 10 20 40 60
SCALE IN FEET

ONEIDA COUNTY NEW YORK 1798

MVCC
MOHAWK VALLEY COMMUNITY COLLEGE

1101 SHERMAN DRIVE
UTICA, NY 13501
(315) 792-5400

ARCHITECT:

MARCH ASSOCIATES
ARCHITECTS & PLANNERS, PC
258 Genesee Street, Suite 300
Utica, New York 13501
315 733 3344

Mitchell Giurgola
Mitchell Giurgola Architects LLP
630 Ninth Avenue, Suite 711
New York, New York 10036
212 663 4000

STRUCTURAL ENGINEER:
Interactive Engineering Solutions, PC
1721 Black River Blvd, Suite L-1
Rome, NY 13440
315 339 7855

MEP ENGINEER:
Towne Engineering
18 South Street
Utica, NY 13501
315 733 9000

SITE | CIVIL ENGINEER:
Appel Osborne Landscape Architecture
102 West Division Street, Suite 100
Syracuse, NY 13204
315 476 1022

SEAL:

REGISTERED LANDSCAPE ARCHITECT VINCENT PAUL PETRONE 001287 STATE OF NEW YORK
Registration current through: 8/31/2026

ISSUE/REVISIONS		
NO.	DATE	COMMENTS
1	9/23/25	REBID & CONSTRUCTION

COPYRIGHT © 2025 MITCHELL GIURGOLA ARCHITECTS LLP
ALL DRAWINGS AND WRITTEN DOCUMENTS SHALL BE CHECKED AND VERIFIED BY THE CONTRACTOR BEFORE PROCEEDING WITH THE WORK.

KEY PLAN:

PLAN NORTH

PROJECT:
S & T BUILDING REPLACEMENT

DRAWING TITLE:
SITE LAYOUT PLAN

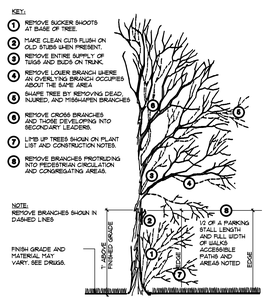
PROJECT NO: 23000	DATE: 9/23/2025
PHASE: REBID & CONSTRUCTION	SCALE: As Indicated

C-106

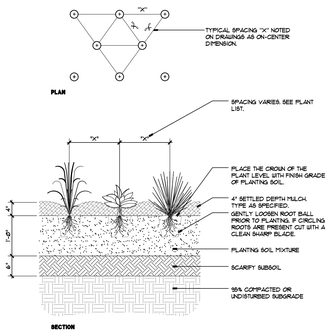
PLANT LIST - MVCC SCIENCE AND TECHNOLOGY BUILDING

KEY	BOTANICAL NAME	COMMON NAME	QTY.	ROOT & SIZE ##	SPACING
AA	AMELANCHIER ARBOREA	SERVICEBERRY	9	No. 3 CONT.	AS SHOWN
AC	ABIES CONCOLOR	BLUE SPRUCE	4	6'-7' HT.	B&B
AF	ACER FREEMANII	FREEMAN MAPLE	8	2-2½" CAL.	AS SHOWN
AM	ARONIA MELANOCARPA	BLACK CHOKEBERRY	17	No. 3 CONT.	5' O.C.
AR	ACER RUBRUM 'OCTOBER GLORY'	RED MAPLE 'OCTOBER GLORY'	7	2-2½" CAL.	AS SHOWN
BN	BETULA NIGRA 'HERITAGE'	RIVER BIRCH	9	2-2½" CAL.	AS SHOWN
CO	CELTIS OCCIDENTALIS	HACKBERRY	11	2-2½" CAL.	AS SHOWN
CP	CHAMAECYPARIS PISIFERA	FALSE CYPRESS SOFT SERVE	54	5'-6' HT.	10' O.C.
CS	CORNUS SERICEA	RED TWIG OSIER DOGWOOD	55	#5 CONT.	30" O.C.
FI	FORSYTHIA x INTERMEDIA 'MAGICAL'	GOLD FORSYTHIA	38	No. 5 CONT.	5' O.C.
JH	JUNIPERUS HORIZONTALIS 'HUGHES'	HUGHES JUNIPER	33	No. 5 CONT.	5' O.C. OR AS SHOWN
PA	PENNISETUM ALOPECUROIDES 'LITTLE BUNNY'	LITTLE BUNNY FOUNTAIN GRASS	202	#2 CONT.	30" O.C.
PG	PICEA GLAUCA 'CONICA'	WHITE SPRUCE	7	5'-6' HT.	AS SHOWN
PV	PANICUM VIRGATUM 'SHENANDOAH'	SHENANDOAH SWITCH GRASS	35	No. 3 CONT.	30" O.C.
RA	RHUS AROMATICA 'GRO-LOW'	FRAGRANT SUMAC	44	No. 5 CONT.	5' O.C. OR AS SHOWN
QB	QUERCUS BICOLOR	SWAMP WHITE OAK	6	2-2½" CAL.	AS SHOWN

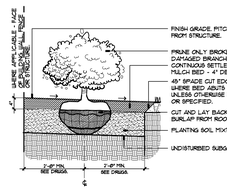
NOTES:
1. PROVIDE VARIETY NOTED, DO NOT SUBSTITUTE WITH SPECIES UNLESS APPROVED BY ARCHITECT.
2. PLANTS TO BE BALLED AND BURLAPPED UNLESS NOTED OTHERWISE.
3. FINAL PLACEMENT OF PLANTS TO BE FIELD DIRECTED BY ARCHITECT.
4. ALL TREES AND SHRUBS NOTED IN THE PLANT LIST SHALL BE GUARANTEED FOR TWO (2) YEARS.
5. NOTIFY THE ARCHITECT IN WRITING WHEN ANY OF THE PROPOSED PLANTS ARE EITHER SENSITIVE TO FALL PLANTING OR ARE PRONE TO DEER DAMAGE IN THE EXPERIENCE OF THE CONTRACTOR.



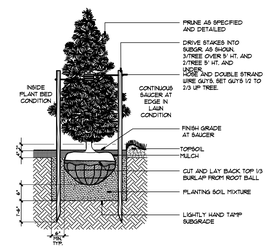
DECIDUOUS TREE PRUNING
SECTION • NOT TO SCALE — 250-004
© APPEL OSBORNE LANDSCAPE ARCHITECTURE



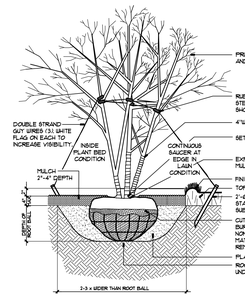
GROUNDCOVER PLANT SPACING
SECTION • NOT TO SCALE — 250-010
© APPEL OSBORNE LANDSCAPE ARCHITECTURE



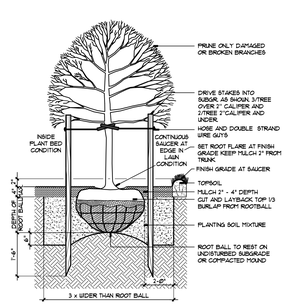
SHRUB PLANTING
SECTION • NOT TO SCALE — 250-002
© APPEL OSBORNE LANDSCAPE ARCHITECTURE



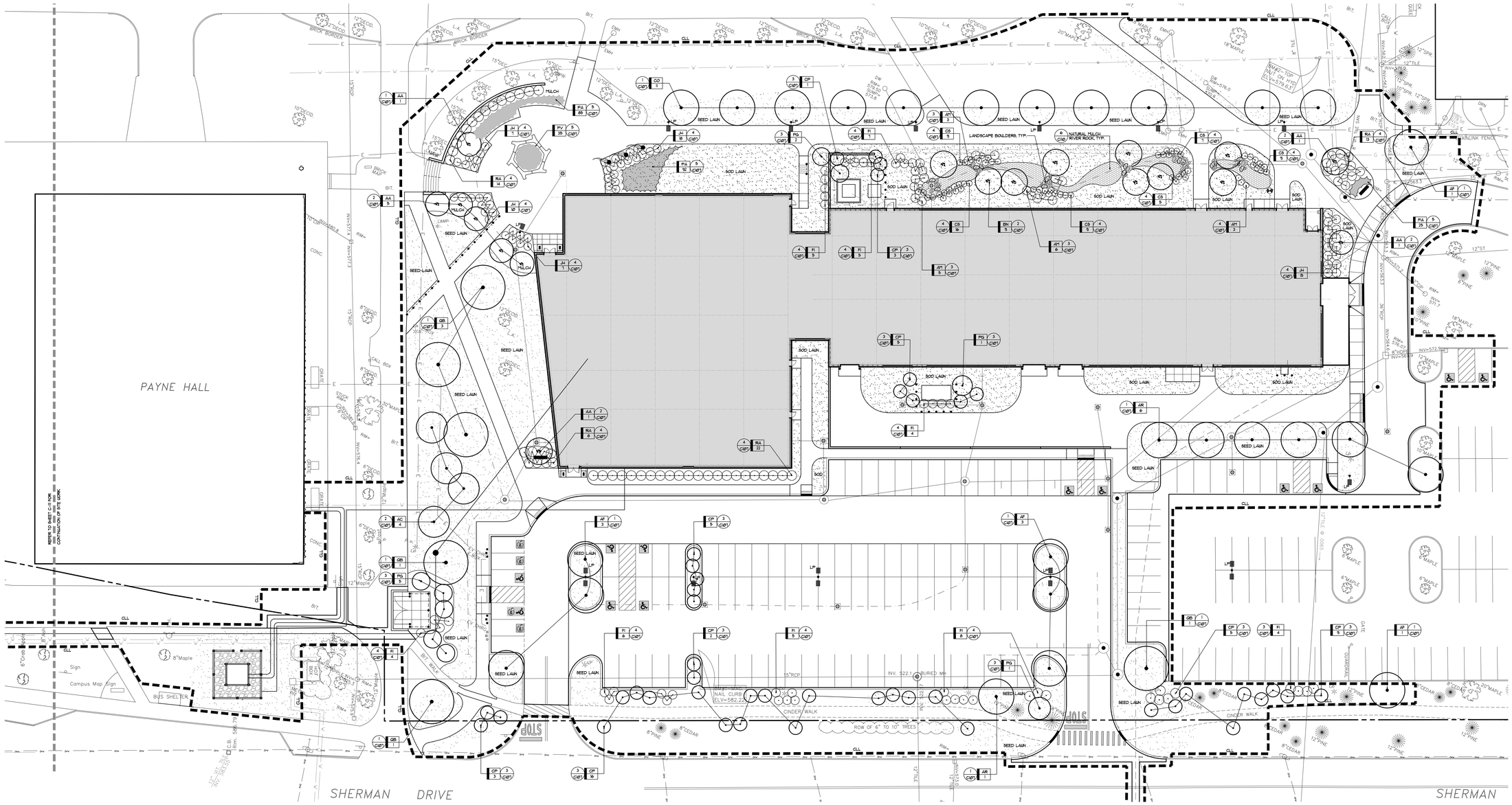
EVERGREEN TREE PLANTING
SECTION • NOT TO SCALE — 250-003
© APPEL OSBORNE LANDSCAPE ARCHITECTURE



DECIDUOUS TREE PLANTING - MULTI-STEM
SECTION • NOT TO SCALE — 250-009A
© APPEL OSBORNE LANDSCAPE ARCHITECTURE



DECIDUOUS TREE PLANTING - SINGLE STEM
SECTION • NOT TO SCALE — 250-001
© APPEL OSBORNE LANDSCAPE ARCHITECTURE



MVCC - SITE PLANTING PLAN

WORK AREA A

0 10 20 40 60
SCALE IN FEET

ONEIDA COUNTY NEW YORK 1798

MVCC
MOHAWK VALLEY COMMUNITY COLLEGE

1101 SHERMAN DRIVE
UTICA, NY 13501
(315) 792-5400

ARCHITECT:

MARCH ASSOCIATES
ARCHITECTS & PLANNERS, PC
258 Genesee Street, Suite 300
Utica, New York 13501
315 733 3344

Mitchell Giurgola
Mitchell Giurgola Architects LLP
630 Ninth Avenue, Suite 711
New York, New York 10036
212 663 4000

STRUCTURAL ENGINEER:
Interactive Engineering Solutions, PC
1721 Black River Blvd, Suite L-1
Rome, NY 13440
315 339 7855

MEP ENGINEER:
Towne Engineering
18 South Street
Utica, NY 13501
315 733 9000

SITE | CIVIL ENGINEER:
Appel Osborne Landscape Architecture
102 West Division Street, Suite 100
Syracuse, NY 13204
315 476 1022

SEAL:
REGISTERED LANDSCAPE ARCHITECT
VINCENT PAUL PETRONE
001287
STATE OF NEW YORK
Registration current through: 8/31/2026

ISSUE/REVISIONS:

NO.	DATE	COMMENTS
1	9/23/25	REBID & CONSTRUCTION

COPYRIGHT © 2025 MITCHELL GIURGOLA ARCHITECTS LLP
ALL DRAWINGS AND WRITING COVERED BY THIS ARE SUBJECT TO AND PROTECTED BY THE COPYRIGHT LAWS OF THE UNITED STATES. THE RECIPIENT SHALL REPORT ANY VISUAL CONTACT WITH THESE DRAWINGS OR WRITINGS SHALL CONSTITUTE PROOF THAT THE RECIPIENT HAS FULLY REVIEWED AND AGREED TO THE COPYRIGHT NOTICE AND ALL OTHER TERMS AND CONDITIONS SET FORTH HEREIN. ANY REPRODUCTION OR UNAUTHORIZED USE OF THESE DRAWINGS WITHOUT THE EXPRESS WRITTEN CONSENT OF MITCHELL GIURGOLA ARCHITECTS LLP IS STRICTLY PROHIBITED.
VERIFY ALL DIMENSIONS AND CONDITIONS IN THE FIELD AND REPORT ANY DISCREPANCIES TO THE ARCHITECT BEFORE PROCEEDING WITH THE WORK.

KEY PLAN:

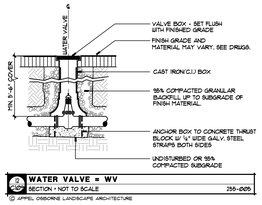
PLAN NORTH

PROJECT:
S & T BUILDING REPLACEMENT

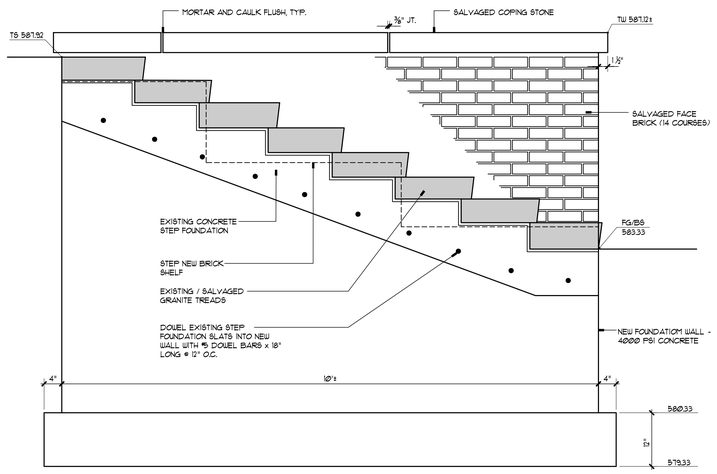
DRAWING TITLE:
SITE PLANTING PLAN

PROJECT NO: 23000	DATE: 9/23/2025
PHASE: REBID & CONSTRUCTION	SCALE: As Indicated

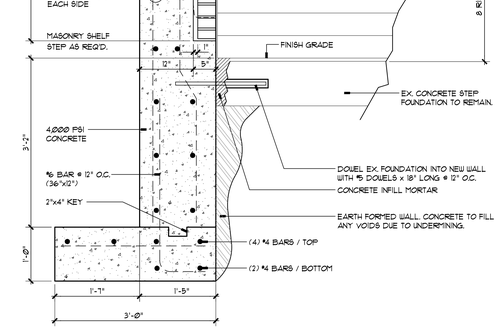
C-107



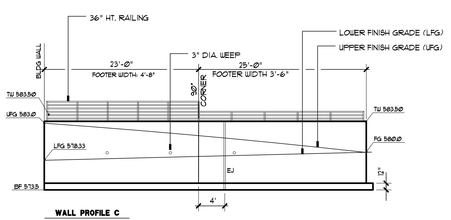
WATER VALVE = WV
SECTION • NOT TO SCALE
255-0205
© APPEL OSBORNE LANDSCAPE ARCHITECTURE



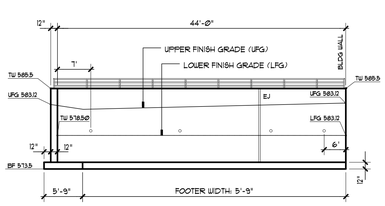
NEW STAIR END WALL - ELEVATION
¾" = 1'-0"
NEW STAIR END WALL - ELEVATION
© APPEL OSBORNE LANDSCAPE ARCHITECTURE



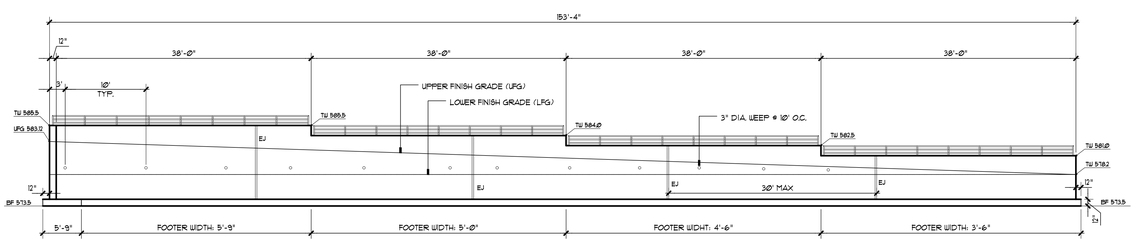
NEW STAIR END WALL - SECTION
¾" = 1'-0"
STAIR END WALL SECTION
© APPEL OSBORNE LANDSCAPE ARCHITECTURE



WALL PROFILE C
¾"=1'-0"

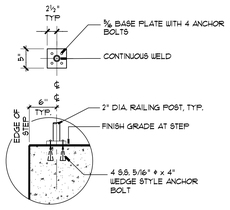


WALL PROFILE A
¾"=1'-0"

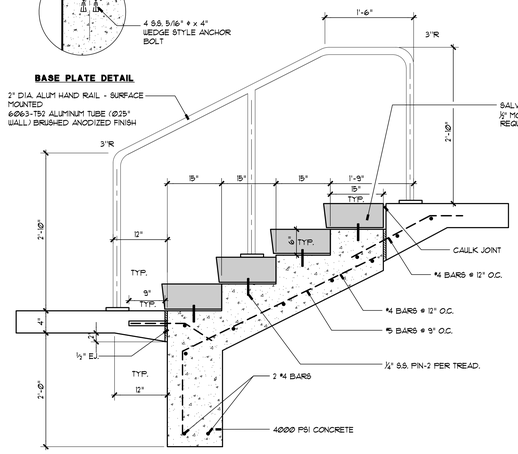


WALL PROFILE B
¾"=1'-0"

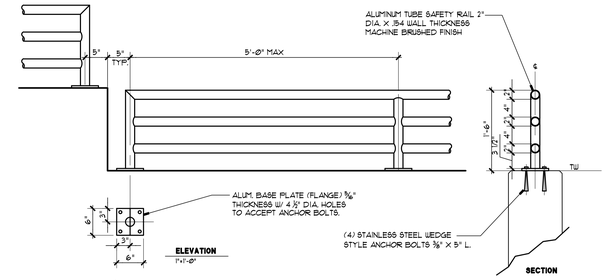
CONCRETE RETAINING WALL
SECTION • NOT TO SCALE
CONCRETE RETAINING WALL
© APPEL OSBORNE LANDSCAPE ARCHITECTURE



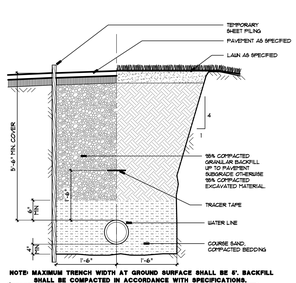
BASE PLATE DETAIL



GRANITE STEPS AND HANDRAIL
SECTION • 1" = 1'-0"
323-1016
© APPEL OSBORNE LANDSCAPE ARCHITECTURE

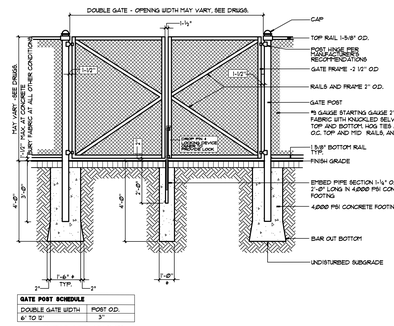


ALUMINUM SAFETY RAIL
SECTION • 1"=1'-0"
ALUMINUM SAFETY RAIL
© APPEL OSBORNE LANDSCAPE ARCHITECTURE



NOTE: MAXIMUM TRENCH WIDTH AT GROUND SURFACE SHALL BE 6'. BACKFILL SHALL BE COMPACTED IN ACCORDANCE WITH SPECIFICATIONS.

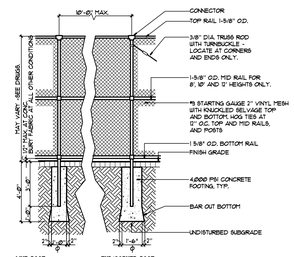
WATERLINE TRENCH = W
SECTION • NOT TO SCALE
255-0204
© APPEL OSBORNE LANDSCAPE ARCHITECTURE



GATE POST SCHEDULE	
DOUBLE GATE WIDTH	POST O.D.
6' TO 9'	3"

6' WITH PVC PRIVACY SLATS

BLACK VINYL CHAIN LINK FENCE GATE - DOUBLE WIDTH
SECTION • NOT TO SCALE
219-0816A
© APPEL OSBORNE LANDSCAPE ARCHITECTURE

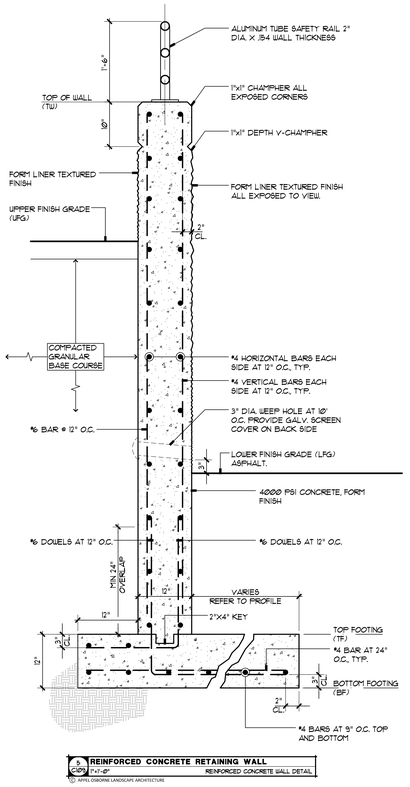


LINE POST **END/CORNER POST**

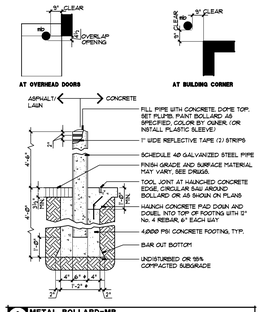
POST SCHEDULE		
FABRIC HEIGHT	LINE POST O.D.	END / CORNER POST O.D.
4' to 6'	2"	2 ½"
8' to 9'	2 ½"	3"

6' WITH PVC PRIVACY SLATS

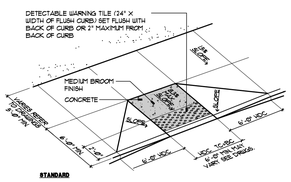
VINYL CHAIN LINK FENCE = CLF
SECTION • NOT TO SCALE
219-0816
© APPEL OSBORNE LANDSCAPE ARCHITECTURE

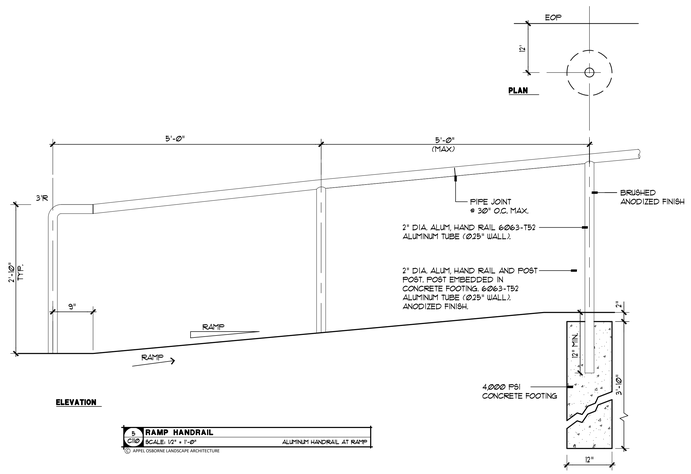


REINFORCED CONCRETE RETAINING WALL
1"=1'-0"
REINFORCED CONCRETE WALL DETAIL
© APPEL OSBORNE LANDSCAPE ARCHITECTURE

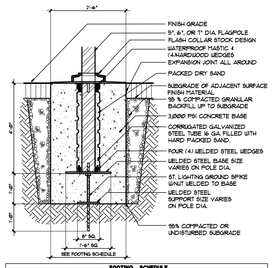


METAL BOLLARD=MB
SECTION • NOT TO SCALE
3230-0004
© APPEL OSBORNE LANDSCAPE ARCHITECTURE


DETECTABLE WARNING TILE (24" X WIDTH OF FLUSH CURB) SET FLUSH WITH BACK OF CURB OR 2" MAXIMUM FROM BACK OF CURB
MEDIUM BROOM FINISH
CONCRETE
6" REVEAL TYP.
SLOPE
SLOPE
SLOPE
SLOPE
4" CONCRETE
4" CONCRETE
4" CONCRET



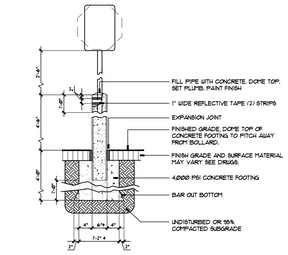
RAMP HANDRAIL — ALUMINUM HANDRAIL AT RAMP
SCALE: 1/2" = 1'-0"
© APPEL OSBORNE LANDSCAPE ARCHITECTURE



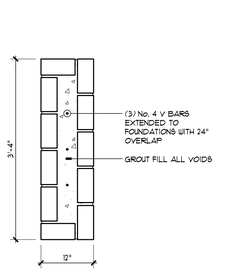
FOOTING SCHEDULE

EXPOSED FLAGPOLE HT.+ DIA.	FOOTING #	STEEL BASE	STEEL SUPPORT	GROUND SPIKE	FOUNDATION TUBE	DEPTH OF EXCAVATION
25'	2'-6"	12"x12"x3/16"	16"x8"x3/16"	3/4"DIA.x18"	3'-6"	3'-4"
30'+1'-6"DIA	2'-6"	12"x12"x3/16"	16"x8"x3/16"	3/4"DIA.x18"	3'-6"	3'-4"
30'+1'-6"DIA	2'-6"	16"x16"x3/16"	8"x8"x3/16"	3/4"DIA.x18"	3'-6"	3'-4"
35'+1'-6"DIA	2'-6"	16"x16"x3/16"	8"x8"x3/16"	3/4"DIA.x18"	3'-6"	3'-10"
35'+1'-7"DIA	2'-6"	16"x16"x3/16"	8"x8"x3/16"	3/4"DIA.x18"	3'-6"	3'-10"

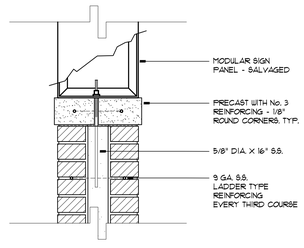
FLAGPOLE BASE — SECTION - NOT TO SCALE — 3230-EM01A
© APPEL OSBORNE LANDSCAPE ARCHITECTURE



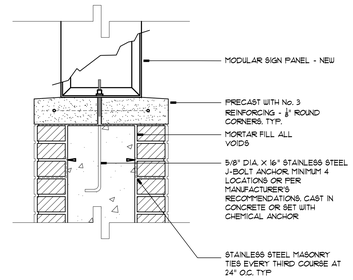
TRAFFIC SIGN WITH METAL BOLLARD=TMB — SECTION - NOT TO SCALE — 3230-EM01C
© APPEL OSBORNE LANDSCAPE ARCHITECTURE



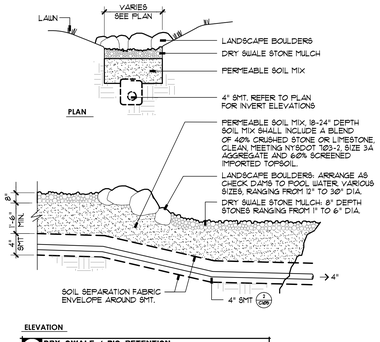
SECTION AT BASE



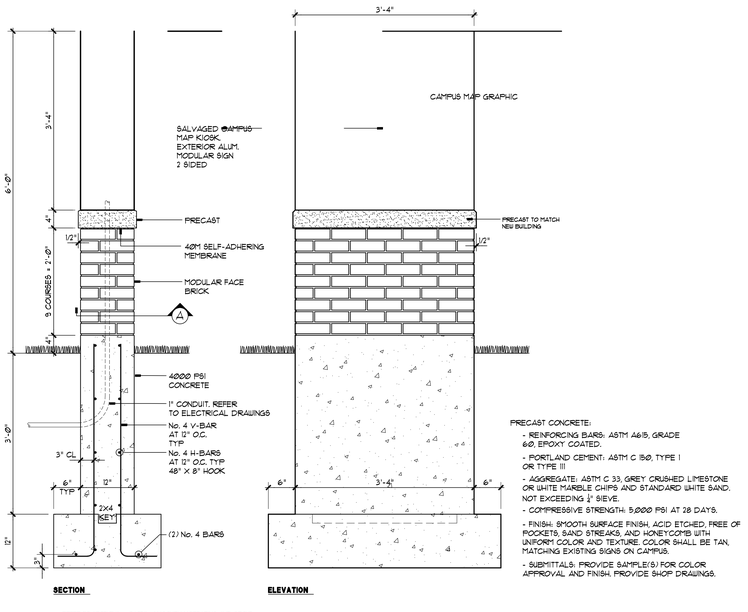
DETAIL SECTION
1 1/2" = 1'-0"



DETAIL SECTION
1 1/2" = 1'-0"



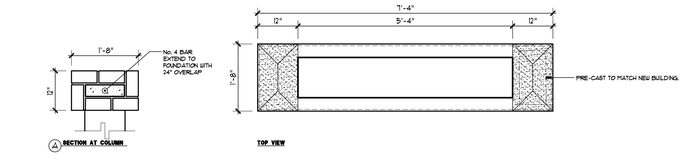
DRY SWALE / BIO RETENTION — SECTION - NOT TO SCALE
© APPEL OSBORNE LANDSCAPE ARCHITECTURE

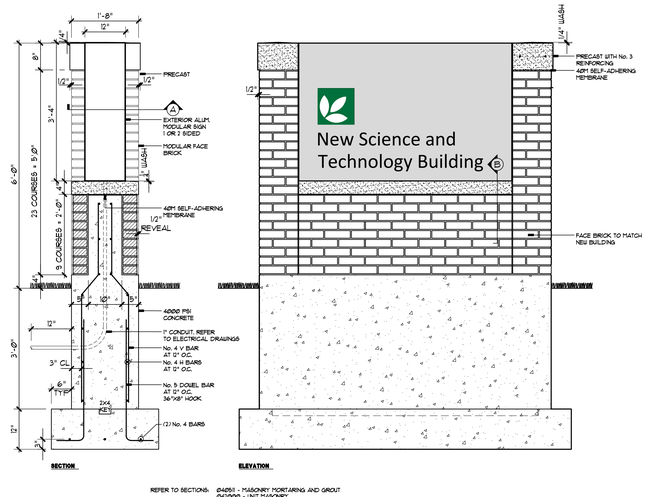


PRECAST CONCRETE:
- REINFORCING BARS: ASTM A615, GRADE 60, EPOXY COATED.
- PORTLAND CEMENT: ASTM C 150, TYPE I OR TYPE III
- AGGREGATE: ASTM C 33, GREY CRUSHED LIMESTONE OR WHITE MARBLE CHIPS AND STANDARD WHITE SAND, NOT EXCEEDING ¼" SIEVE.
- COMPRESSIVE STRENGTH: 5,000 PSI AT 28 DAYS.
- FINISH: SMOOTH SURFACE FINISH, ACID ETCHED, FREE OF POCKETS, SAND STREAKS, AND HONEYCOMBS WITH UNIFORM COLOR AND TEXTURE. COLOR SHALL BE TAN, MATCHING EXISTING SIGNS ON CAMPUS.
- SUBMITTALS: PROVIDE SAMPLE(S) FOR COLOR APPROVAL AND FINISH. PROVIDE SHOP DRAWINGS.

REFER TO SECTIONS: Ø4061 - MASONRY MORTARING AND GROUT
Ø42000 - UNIT MASONRY

CAMPUS MAP KIOSK - RELOCATED — SECTION - NOT TO SCALE — KIOSK
© APPEL OSBORNE LANDSCAPE ARCHITECTURE





REFER TO SECTIONS: Ø4061 - MASONRY MORTARING AND GROUT
Ø42000 - UNIT MASONRY

ILLUMINATED BUILDING IDENTIFICATION — 3/4" = 1'-0" — SIGN
© APPEL OSBORNE LANDSCAPE ARCHITECTURE

ONEIDA COUNTY NEW YORK 1798

MVCC
MOHAWK VALLEY COMMUNITY COLLEGE
1101 SHERMAN DRIVE
UTICA, NY 13501
(315) 792-5400

ARCHITECT:
MARCH ASSOCIATES ARCHITECTS & PLANNERS, PC
258 Genesee Street, Suite 300
Utica, New York 13501
315 733 3344

Mitchell Giurgola
Mitchell Giurgola Architects LLP
630 Ninth Avenue, Suite 711
New York, New York 10036
212 663 4000

STRUCTURAL ENGINEER:
Interactive Engineering Solutions, PC
1721 Black River Blvd, Suite L-1
Rome, NY 13440
315 339 7855

MEP ENGINEER:
Towne Engineering
18 South Street
Utica, NY 13501
315 733 9000

SITE | CIVIL ENGINEER:
Appel Osborne Landscape Architecture
102 West Division Street, Suite 100
Syracuse, NY 13204
315 476 1022

SEAL:
REGISTERED LANDSCAPE ARCHITECT — VINCENT PAUL PETRONE — 001287 — STATE OF NEW YORK
Registration current through: 8/31/2026

ISSUE/REVISIONS:

NO.	DATE	COMMENTS
1	9/23/25	REBID & CONSTRUCTION

COPYRIGHT © 2025 MITCHELL GIURGOLA ARCHITECTS LLP
ALL DRAWINGS AND DRAWING CONDITIONS SHALL BE CHECKED AND VERIFIED BY THE CONTRACTOR BEFORE PROCEEDING WITH THE WORK.

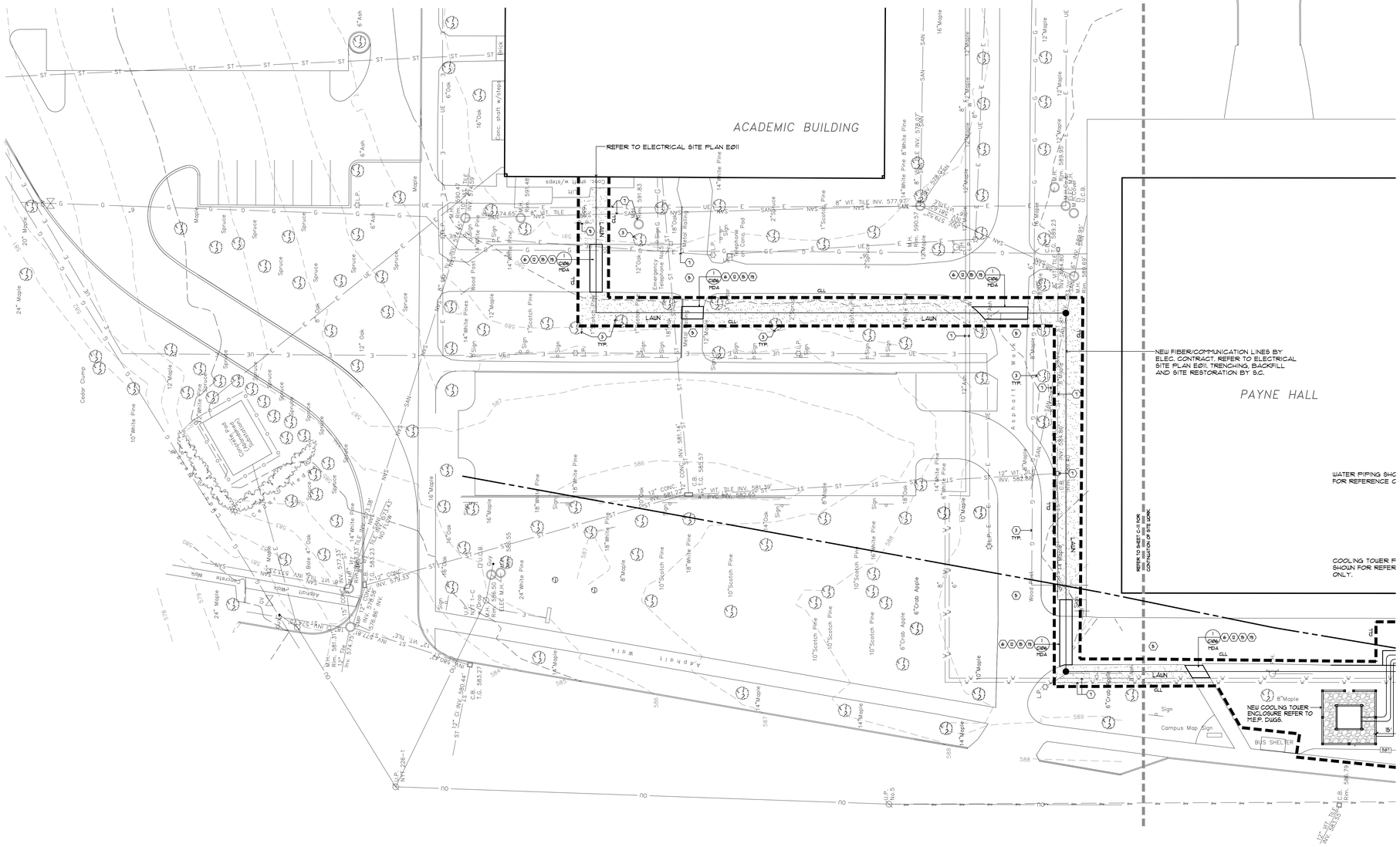
KEY PLAN:
PLAN NORTH

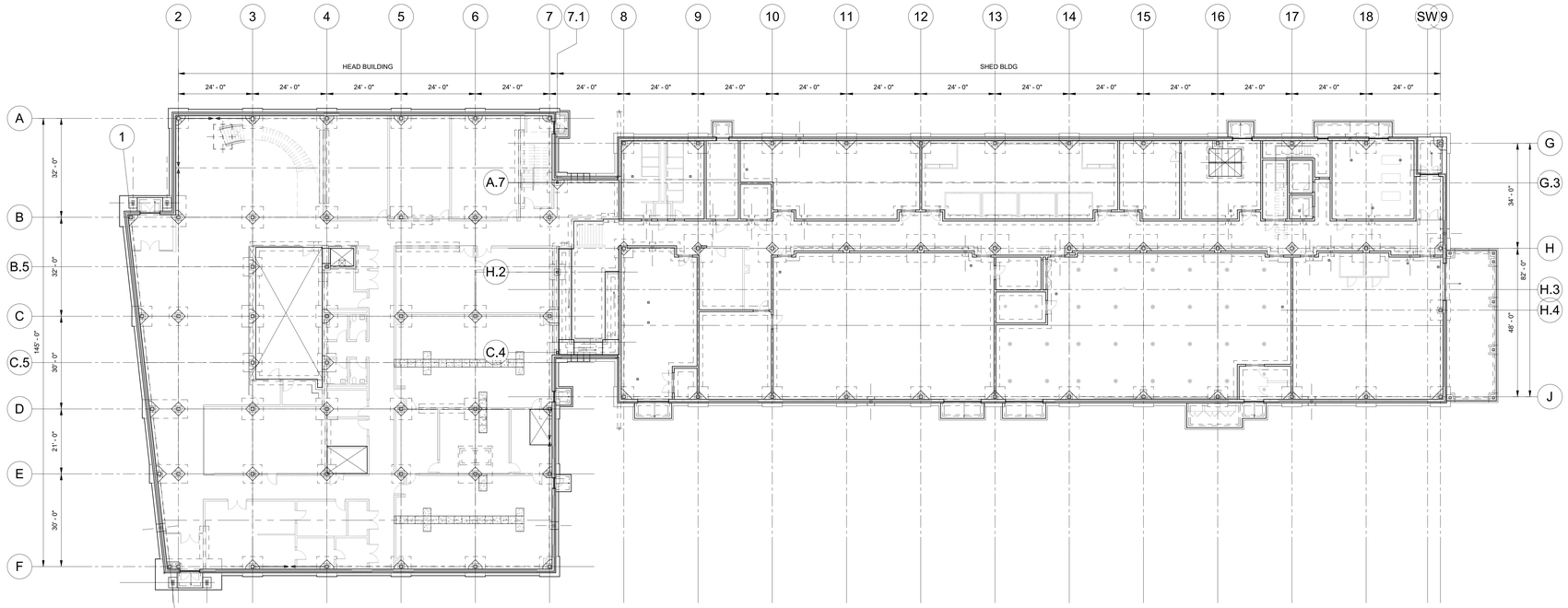
PROJECT:
S & T BUILDING REPLACEMENT

DRAWING TITLE:
SITE DETAILS

PROJECT NO: 23000 | DATE: 9/23/2025
PHASE: REBID & CONSTRUCTION | SCALE: As Indicated

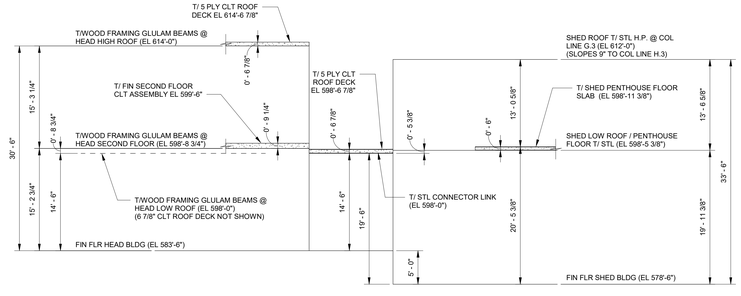
C-110


ACADEMIC BUILDING
REFER TO ELECTRICAL SITE PLAN E011
PAYNE HALL
NEW FIBER/COMMUNICATION LINES BY ELEC. CONTRACT. REFER TO ELECTRICAL SITE PLAN E011. TRENCHING, BACKFILL AND SITE RESTORATION BY S.C.
NEW COOLING TOWER ENCLOSURE REFER TO M.E.P. DWGS.
BUS SHELTER
Campus Map Sign
Asphalt Walk
LAUN
Cedar Dump
Compost Pad (Abandoned)
Wood Post
Wood Rail
Fence
Emergency Phone
Telephone
Comp. Pad
Sign
Bike
Bench
Flag Pole
Hydrant
Gate
Curb Inlet
Catch Basin
Manhole
Utility Pole
Guy Wire
Light Pole
Conc. Pad
Transformer
Gas Valve
Gas Meter
Water Valve
Water Meter
Boiler
Generator
Vent
Fan
Louver
Roof Drain
Roof Hatch
Skylight
Roof Ladder
Roof Access
Roof Edge
Roof Slope



1 S-100 FOUNDATION PLAN - OVERALL
1/16" = 1'-0"

NOTES:
SEE DWGS S-101 AND S-102 FOR PLAN NOTES FOR HEAD AND SHED BUILDINGS, RESPECTIVELY.



BUILDING ELEVATION DIAGRAM

BPSP-1 BUILDING PAD SITE PREPARATION / GROUND IMPROVEMENTS GENERAL NOTES:

A. REFERENCED GEOTECHNICAL INFORMATION AND REPORTS:

1. THE BUILDING PAD SITE PREPARATION WITH GROUND IMPROVEMENTS, THE FOUNDATION SYSTEM AND DESIGN PARAMETERS, AND THE GENERAL NOTES PRESENTED ON THE DRAWINGS AND WITHIN THE CONTRACT DOCUMENTS ARE BASED ON INFORMATION CONTAINED WITHIN THE FOLLOWING REFERENCED GEOTECHNICAL INFORMATION AND REPORTS AS PREPARED BY CME ASSOCIATES, INC., INCLUDING VARIOUS EMAIL COMMUNICATIONS AND MULTIPLE CONFERENCE CALLS BETWEEN CME ASSOCIATES AND MEMBERS OF THE PROJECT TEAM THROUGHOUT THE DESIGN AND DOCUMENT PREPARATION PROCESS.

   a. SUBSURFACE EXPLORATION AND FOUNDATION RECOMMENDATION REPORT, MOHAWK VALLEY COMMUNITY COLLEGE SCIENCE AND TECHNOLOGY BUILDING, UTICA NY, CME REPORT NO. 28107B-01-0224, DATED FEBRUARY 23, 2024.

   b. SUBSURFACE EXPLORATION AND FOUNDATION RECOMMENDATION REPORT – ADDENDUM 1, MOHAWK VALLEY COMMUNITY COLLEGE SCIENCE AND TECHNOLOGY BUILDING, UTICA NY, CME REPORT NO. 28107B-02-0824, DATED AUGUST 05, 2024

B. THE RESULTS OF THE SUBSURFACE CONDITIONS IDENTIFIED IN CME'S SUBSURFACE EXPLORATIONS AND TEST PITS AT THE PROJECT SITE INDICATE THE SITE CONTAINS UNSUITABLE / UNRELIABLE BEARING MATERIALS (EXISTING UNCONTROLLED FILL) RANGING FROM ABOUT 3-FEET TO 13-FEET BELOW EXISTING GRADES, UNDERLAIN BY A BURIED ORGANIC LAYER (TO APPROXIMATELY 8 TO 11 FEET BELOW EXISTING GRADE IN AREAS). THE EXISTING FILL MATERIAL DOES NOT APPEAR TO HAVE BEEN PLACED IN A PREPARED MANNER AND MEETS THE BUILDING CODE DEFINITION OF "UNPREPARED FILL". UNPREPARED FILL IS ASSIGNED A ZERO-BEARING CAPACITY BY THE BUILDING CODE AND IS DEEMED "UNSUITABLE SOILS". THE BURIED ORGANIC LAYER IS ALSO NOT RELIABLE BEARING MATERIAL TO SUPPORT BUILDING FOUNDATIONS AND SLABS-ON-GRADES. REFER TO THE ABOVE NOTED REPORTS CONTAINED IN THE PROJECT MANUAL FOR ADDITIONAL INFORMATION.

BASED ON THE INFORMATION PROVIDED AND DISCUSSED, THE EXISTING SUBSURFACE CONDITIONS IDENTIFIED ARE NOT FAVORABLE TO SUPPORT THE PROPOSED STRUCTURES UTILIZING A "CONVENTIONAL" SHALLOW FOUNDATIONS AND SLABS-ON-GRADE SYSTEMS WITHOUT INCORPORATING A "GROUND IMPROVEMENT" SYSTEM.

TO ALLOW THE INSTALLATION OF THE "CONVENTIONAL" SHALLOW FOUNDATIONS AND SLAB-ON-GRADE SYSTEM AS DESIGNED AND AS SHOWN ON THE CONTRACT DOCUMENTS FOR THE PROPOSED BUILDINGS, THE FOLLOWING GROUND IMPROVEMENT SYSTEM IS REQUIRED TO BE INSTALLED UNDER THE ENTIRE FOOTPRINT OF BOTH THE HEAD BUILDING AND THE SHED BUILDING.

C. GROUND IMPROVEMENT SYSTEM WITH AGGREGATE PIERS (aka: STONE COLUMNS) AND LOAD TRANSFER PLATFORMS (LTP):

1. THE "CONVENTIONAL" SHALLOW FOUNDATIONS AND SLAB-ON-GRADE SYSTEM AS DESIGNED AND AS SHOWN ON THE CONTRACT DOCUMENTS FOR THE PROPOSED BUILDINGS ASSUMES THE EXISTING FILL AND THE BURIED ORGANIC LAYER SHALL BE LEFT IN-PLACE AND SHALL BE IMPROVED VIA A GROUND IMPROVEMENT SYSTEM CONSISTING OF AGGREGATE PIERS AND LOAD TRANSFER PLATFORM (LTP). THE CONVENTIONAL SHALLOW FOOTING FOUNDATIONS AND SLABS-ON-GRADE SYSTEMS SHALL BEAR ON THE LOAD TRANSFER PLATFORM.

2. THE AGGREGATE PIER SYSTEM IS A PROPRIETARY GROUND IMPROVEMENT SYSTEM USED FOR SETTLEMENT CONTROL AND TO IMPROVE BEARING CHARACTERISTICS OF POOR OR WEAK SOILS. WITH THIS SYSTEM, AGGREGATE PIERS SHALL BE INSTALLED USING SPECIALTY DESIGNED TOOLING WHICH LATERALLY DISPLACES THE SOILS AS THE ELEMENT IS INSTALLED. THE BEHAVIOR OF THE SOIL SURROUNDING THE AGGREGATE PIERS IS OFTEN IMPROVED DUE TO THE INCREASED LATERAL STRAIN THAT RESULTS FROM THE DISPLACED DRILLING TECHNIQUE.

3. THE AGGREGATE PIER GROUND IMPROVEMENT SYSTEM SHALL INCLUDE A LOAD TRANSFER PLATFORM (LTP) TO ASSIST IN LOAD TRANSFER BETWEEN THE FOUNDATION ELEMENTS AND THE AGGREGATE PIERS. THE LTP SHALL BE A "DELEGATED DESIGN" BY THE AGGREGATE PIER SPECIALTY SUBCONTRACTOR (GROUND IMPROVEMENT SUBCONTRACTOR) AND SHALL BE INSTALLED BY A SPECIALTY GROUND IMPROVEMENT SUBCONTRACTOR / EARTHWORK CONTRACTOR. THE LTP IS TYPICALLY COMPRISED OF WELL-COMPACTED GRANULAR MATERIAL SUCH AS NYSDOT TYPE 2 SUBBASE COURSE MATERIAL (RUN-OF-CRUSH LIMESTONE).

4. THE AGGREGATE PIER GROUND IMPROVEMENT SYSTEM SHALL BE DESIGNED AND INSTALLED BY A SPECIALTY GROUND IMPROVEMENT SUBCONTRACTOR TO MEET THE PERFORMANCE SPECIFICATION AND GENERAL REQUIREMENTS PROVIDED WITHIN THE CONTRACT DOCUMENTS.

5. THE GROUND IMPROVEMENT SYSTEM SHALL BE DESIGNED AND INSTALLED TO PROVIDE AN ALLOWABLE SOIL BEARING PRESSURE OF 4,000 PSF (WITH A MINIMUM FACTOR OF SAFETY OF 2.0) FOR THE SUPPORT OF THE FOOTING FOUNDATIONS AND A MODULUS OF SUBGRADE REACTION OF 200 PCI FOR THE SUPPORT OF THE SLABS-ON-GRADE.

6. THE GROUND IMPROVEMENT SYSTEM SHALL BE DESIGNED AND INSTALLED BY A SPECIALTY SUBCONTRACTOR RESPONSIBLE FOR CREATING AN IMPROVED AND SUITABLE BUILDING PAD. THIS PROCEDURE REQUIRES CONTINUAL ON-SITE OBSERVATIONS AND TESTING BY THE OWNER PROVIDED INSPECTING PROFESSIONAL GEOTECHNICAL ENGINEER (IPGE) SPECIAL INSPECTOR AND SHALL BE COMPLETED PRIOR TO ANY EXCAVATION FOR THE PROPOSED FOUNDATION SYSTEM.

7. REFER TO AGGREGATE PIERS SPECIFICATION SECTION 31 66 13 FOR ADDITIONAL INFORMATION RELATED TO THE REQUIREMENTS OF THE GROUND IMPROVEMENT SYSTEM.

8. DELEGATED DESIGN OF GROUND IMPROVEMENT SYSTEM

   a. THE DESIGN OF THE GROUND IMPROVEMENT SYSTEM SHALL BE DELEGATED TO THE SPECIALTY GROUND IMPROVEMENT SUBCONTRACTOR. THE DELEGATED DESIGN SHALL BE IN ACCORDANCE WITH NEW YORK STATE EDUCATION LAW (SECTION 29.3(b)(2) OF THE RULES OF THE BOARD OF REGENTS).

   b. AS PART OF THE DELEGATED DESIGN, THE SPECIALTY GROUND IMPROVEMENT SUBCONTRACTOR SHALL PREPARE A COMPLETE DESIGN AND INSTALLATION SUBMITTAL PACKAGE. THE SUBMITTAL PACKAGE SHALL INCLUDE, BUT IS NOT LIMITED TO, ALL COMPUTATIONS (ORGANIZED IN A LOGICAL AND PROFESSIONAL MANNER), DESIGN METHODS, FACTORS OF SAFETY, BUILDING CODE COMPLIANCE CHECKS, EQUIPMENT'S TO BE USED, PROCEDURE OF INSTALLATION, MODULUS TEST SETUP, CRITERIA FOR ACCEPTANCE OF GROUND IMPROVEMENT ELEMENTS, AND ALL MATERIAL SPECIFICATIONS, QUALITY CONTROL AND WORKMANSHIP REQUIREMENTS. THE DESIGN AND INSTALLATION SUBMITTAL SHALL BE SIGNED AND SEALED BY THE SPECIALTY SUBCONTRACTORS LICENSED PROFESSIONAL ENGINEER (WHO IS CURRENTLY REGISTERED IN THE STATE OF NEW YORK) AND WHO IS RESPONSIBLE FOR THE PREPARATION OF THE DESIGN AND ASSOCIATED DOCUMENTATION OF THE GROUND IMPROVEMENT SYSTEM. THE DESIGN AND INSTALLATION PACKAGE SHALL BE SUBMITTED TO THE ARCHITECT / ENGINEER A MINIMUM OF FIFTEEN (15) BUSINESS DAYS IN ADVANCE OF THE PRE-INSTALLATION CONFERENCE FOR REVIEW AND COMMENT.

   c. REFER TO THE COLUMN SCHEDULE FOR THE SHED BUILDING (DRAWING S-701) AND THE GLULAM COLUMN SCHEDULE FOR THE HEAD BUILDING (DRAWING S-901) FOR THE MAXIMUM UN-FACTORED DESIGN LOADS AT EACH COLUMN SPREAD FOOTING.

   d. THE GROUND IMPROVEMENT SYSTEM SHALL BE DESIGNED FOR THE FOLLOWING UN-FACTORED DESIGN LOADS FOR THE CONTINUOUS WALL SPREAD FOOTINGS AT EACH BUILDING:

      - HEAD BUILDING: EXTERIOR (AROUND THE PERIMETER) = 12 KIPS PER LINEAR FOOT AT BOTTOM OF FOOTING.
      - HEAD BUILDING: INTERIOR = 12 KIPS PER LINEAR FOOT AT BOTTOM OF FOOTING.
      - SHED BUILDING AND CONNECTING LINK: EXTERIOR (AROUND THE PERIMETER) = 12 KIPS PER LINEAR FOOT AT BOTTOM OF FOOTING.
      - SHED BUILDING AND CONNECTING LINK: INTERIOR = 12 KIPS PER LINEAR FOOT AT BOTTOM OF FOOTING.

   e. THE GROUND IMPROVEMENT SYSTEM SHALL BE DESIGNED FOR THE FOLLOWING UN-FACTORED SLAB-ON-GRADE UNIFORM DESIGN LIVE LOADS AT EACH BUILDING (PLUS DEAD LOAD OF CONCRETE FLOOR SLAB) :

      - HEAD BUILDING (TYPICAL AREAS): 100 POUNDS PER SQUARE FOOT (PSF) + WEIGHT OF CONCRETE FLOOR SLAB.
      - SHED BUILDING AND CONNECTING LINK HEAD BUILDING:
        - TYPICAL AREAS W/ 6-INCH FLOOR SLAB THICKNESS: 100 POUNDS PER SQUARE FOOT (PSF) + WEIGHT OF CONCRETE FLOOR SLAB.
        - TYPICAL AREAS W/ 8-INCH FLOOR SLAB THICKNESS: 200 POUNDS PER SQUARE FOOT (PSF) + WEIGHT OF CONCRETE FLOOR SLAB.

9. LOAD TESTING OF GROUND IMPROVEMENT SYSTEM

   a. A MINIMUM OF TWO (2) STATIC LOAD TESTS (SOIL MODULUS TEST) SHALL BE CONDUCTED IN CONFORMANCE WITH THE AGGREGATE PIERS SPECIFICATIONS (SECTION 31 66 13) AND THE APPROVED AGGREGATE PIER DESIGN SUBMITTAL, AND IN GENERAL CONFORMANCE WITH ASTM D-1143. THE TEST AGGREGATE PIER INSTALLATION AND LOAD TESTING SHALL OCCUR IN THE PRESENCE OF THE OWNER PROVIDED INSPECTING PROFESSIONAL GEOTECHNICAL ENGINEER (IPGE), AT LOCATIONS SELECTED BY THE ARCHITECT / ENGINEER.

   b. THE LOAD TESTS SHALL BE PERFORMED ON SACRIFICIAL AGGREGATE PIERS. THE LOAD TESTS SHALL BE CONSIDERED SATISFACTORY WHEN ALL OF THE ACCEPTANCE CRITERIA SET FORTH BY THE SPECIALTY GROUND IMPROVEMENT DESIGN ENGINEER ARE MET AND ACCEPTED BY THE ARCHITECT / ENGINEER.

10. SPECIAL INSPECTION OF GROUND IMPROVEMENT SYSTEM

   a. THE OWNER WILL ENGAGE THE SERVICES OF A QUALIFIED PRE-APPROVED TESTING AGENCY AND INSPECTION PROFESSIONAL GEOTECHNICAL ENGINEER (IPGE) TO PERFORM ALL REQUIRED SPECIAL INSPECTIONS DURING CONSTRUCTION.

   b. THE OWNER PROVIDED IPGE IS REQUIRED TO PERFORM ALL REQUIRED SPECIAL INSPECTIONS ON A CONTINUOUS BASIS WHILE ALL AGGREGATE PIERS ARE BEING INSTALLED AND DURING ALL LOAD TESTING. THE SPECIALTY GROUND IMPROVEMENT SUBCONTRACTOR SHALL SUBMIT ALL CERTIFICATIONS AND MATERIAL DATA SHEETS FOR THE MATERIAL DELIVERED TO THE JOBSITE FOR REVIEW AND CONFORMANCE VERIFICATION BY THE IPGE.

   c. REFER TO SPECIFICATION SECTION 01 45 33 "CODE REQUIRED SPECIAL INSPECTIONS AND PROCEDURES" PROVIDED IN THE PROJECT MANUAL FOR ADDITIONAL INFORMATION.

11. ALTERNATE GROUND IMPROVEMENT SYSTEM OPTIONS

   a. THE ARCHITECT / ENGINEERS RECOGNIZE THAT SPECIALTY GROUND IMPROVEMENT SUBCONTRACTORS WHO HAVE THE CAPABILITIES TO DESIGN AND CONSTRUCT AN AGGREGATE PIER SYSTEM HAVE THEIR OWN PROPRIETARY METHODOLOGIES. THEREFORE, GROUND IMPROVEMENT SUBCONTRACTORS MAY NOT ALL AGREE ON WHETHER A SPECIFIC SITE IS A GOOD CANDIDATE FOR THEIR SPECIFIC PROPRIETARY AGGREGATE PIER SYSTEM.

   b. IF A GROUND IMPROVEMENT SUBCONTRACTOR BIDDING THIS PROJECT HAS AN ALTERNATE GROUND IMPROVEMENT SYSTEM THAT THEY BELIEVE IS BEST SUITED FOR THIS PROJECT SITE AND BELIEVE THEIR SYSTEM IS COST EFFECTIVE, THE BIDDER SHALL SUBMIT A DESIGN OF THEIR SPECIFIC RECOMMENDED GROUND IMPROVEMENT SYSTEM TO THE ARCHITECT / ENGINEER FOR REVIEW AND CONSIDERATION. ANY AND ALL ALTERNATE GROUND IMPROVEMENT SYSTEMS SHALL BE SUBMITTED AND PRE-APPROVED PRIOR TO BIDDING. **NO EXCEPTIONS.**

12. PRE-CONSTRUCTION EXISTING CONDITION SURVEYS AND VIBRATION MONITORING

   a. GROUND IMPROVEMENT OPERATIONS (INSTALLATION OF AGGREGATE PIERS) AND OTHER NEW CONSTRUCTION AT THE PROJECT SITE WILL CAUSE GROUND VIBRATION WHICH MAY CAUSE DAMAGE TO NEARBY STRUCTURES AND SURROUNDING UTILITIES.

   b. THE GROUND IMPROVEMENT SUBCONTRACTOR SHALL BE RESPONSIBLE FOR PERFORMING A PRE-CONSTRUCTION EXISTING CONDITION SURVEY OF THE AREAS OF THE NEARBY STRUCTURES AND SURROUNDING UTILITIES, WHICH MAY BE AFFECTED BY THE GROUND IMPROVEMENT OPERATIONS AND NEW CONSTRUCTION OF THE PROPOSED STRUCTURES. THIS SURVEY SHALL BE PERFORMED PRIOR TO THE START OF ANY GROUND IMPROVEMENT OPERATIONS.

   c. THE PRE-CONSTRUCTION EXISTING CONDITION SURVEY SHALL BE PERFORMED BY A NEW YORK STATE LICENSED PROFESSIONAL ENGINEER (LPE) WHO HAS BEEN HIRED BY THE GROUND IMPROVEMENT SUBCONTRACTOR. THE SUBCONTRACTOR'S LPE SHALL HAVE A MINIMUM OF TEN (10) YEARS OF DEMONSTRABLE SIMILAR EXPERIENCE. THE SUBCONTRACTOR'S LPE SHALL ASSESS DAMAGE POTENTIAL, BASED ON THEIR PLANNED WORK AND SHALL SUGGEST ANY ADJUSTMENTS NECESSARY TO THE GROUND IMPROVEMENT PROGRAM TO ELIMINATE DAMAGE.

   d. THE CONDITION OF THE EXISTING STRUCTURES SHALL BE CAREFULLY ASSESSED BY THE SUBCONTRACTOR'S LPE, AND A CONSTRUCTION PLAN SHALL BE PREPARED AND SUBMITTED TO THE ARCHITECT / ENGINEER FOR REVIEW AND COMMENT WHICH CLEARLY DEMONSTRATES THE WORK, THE VIBRATION MONITORING NECESSARY, AND THE THRESHOLD VIBRATION LIMITS TO ELIMINATE POTENTIAL DAMAGE TO THE EXISTING STRUCTURES AND SURROUNDING UTILITIES DURING CONSTRUCTION.

   e. THE GROUND IMPROVEMENT SUBCONTRACTOR SHALL BE RESPONSIBLE FOR PREPARING A VIBRATION MONITORING PROGRAM. THE INTENT OF THE PROGRAM IS TO ESTABLISH PROTOCOL TO DOCUMENT VIBRATIONS IN REAL TIME DURING CONSTRUCTION AND VIBRATORY SOIL COMPACTION, SUCH THAT ADJACENT STRUCTURES ARE NOT DAMAGED DURING THE CONSTRUCTION ACTIVITIES.

   ADDITIONALLY, THE GROUND IMPROVEMENT SUBCONTRACTOR'S LPE SHALL ASSESS WHETHER CONSTRUCTION ACTIVITIES, SUCH AS INSTALLATION OF THE AGGREGATE PIERS, WILL CAUSE SOIL DENSIFICATION, WHICH MAY LEAD TO ADJACENT STRUCTURE SETTLEMENT.

   THE VIBRATION MONITORING PROGRAM SHALL BE PREPARED AND SIGNED BY THE GROUND IMPROVEMENT SUBCONTRACTOR'S NEW YORK STATE LICENSED PROFESSIONAL ENGINEER (LPE) WHO HAS DEMONSTRABLE EXPERIENCE IN THIS TYPE OF WORK.

   THE LATERAL AND VERTICAL EXTENTS OF THE PRE-CONSTRUCTION EXISTING CONDITION SURVEY AREA, VIBRATION MONITORING POINTS, THRESHOLD VIBRATION LIMITS, VIBRATION RECORDING, AND REPORTING PROTOCOLS, AND OTHER PERTINENT ITEMS SHALL BE AS DEFINED IN THE CONSTRUCTION DOCUMENTS AND IF DEEMED APPROPRIATE, THRESHOLD VIBRATION LIMITS, SHALL BE ADJUSTED BY THE GROUND IMPROVEMENT SUBCONTRACTOR'S LPE.

   AS PART OF THE CONSTRUCTION PHASE SUBMITTAL PROCESS, THE VIBRATION MONITORING PLAN SHALL PROVIDED AS PART OF THE REQUIRED PRE-CONSTRUCTION SUBMITTAL TO THE ARCHITECT / ENGINEER.

D. REFER TO PROJECT SPECIFICATION SECTION 312000 – "BUILDING EARTH MOVING" FOR ADDITIONAL INFORMATION.

E. REFER TO DRAWINGS S-101 AND S-102 FOR GENERAL AREA SPECIFIC BUILDING FOUNDATION PLAN NOTES.

F. REFER TO DRAWING S401 FOR FOUNDATIONS / BUILDING SITE PREPARATION GENERAL NOTES FOR ADDITIONAL INFORMATION.

ONEIDA COUNTY NEW YORK 1798

MVCC
MOHAWK VALLEY COMMUNITY COLLEGE
1101 SHERMAN DRIVE
UTICA, NY 13501
(315) 792–5400

ARCHITECT:
MARCH ASSOCIATES ARCHITECTS & PLANNERS, PC
258 Genesee Street, Suite 300
Utica, New York 13501
315 733 3344

Mitchell Giurgola
Mitchell Giurgola Architects LLP
630 Ninth Avenue, Suite 711
New York, New York 10036
212 663 4000

STRUCTURAL ENGINEER:
Interactive Engineering Solutions, PC
1721 Black River Blvd, Suite L-1
Rome, NY 13440
315 339 7855
IE Solutions
Interactive Engineering Solutions, PC
Interactive Engineering Solutions P.C.
Certificate of Authorization No. 0022543
Expiration Date: 11/30/2027

MEP ENGINEER:
Towne Engineering
18 South Street
Utica, NY 13501
315 733 9000

SITE | CIVIL ENGINEER:
Appel Osborne Landscape Architecture
102 West Division Street, Suite 100
Syracuse, NY 13204
315 476 1022

SEAL:

STATE OF NEW YORK DOUGLAS R. CAHILL 061675 LICENSED PROFESSIONAL ENGINEER

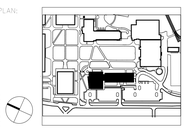
Douglas R. Cahill, PE
NYS Professional Engineer No. 61675
Expiration Date 3/31/2026

ISSUE/REVISION:

NO.	DATE	COMMENTS
1	9/23/25	REBID & CONSTRUCTION

ALL DIMENSIONS AND EXISTING CONDITIONS SHOWN ON THE DRAWINGS ARE APPROXIMATE. ALL DIMENSIONS AND EXISTING CONDITIONS SHALL BE CHECKED AND VERIFIED BY THE CONTRACTOR BEFORE PROCEEDING WITH THE WORK.

KEY PLAN:



PROJECT:

SCIENCE & TECHNOLOGY BUILDING

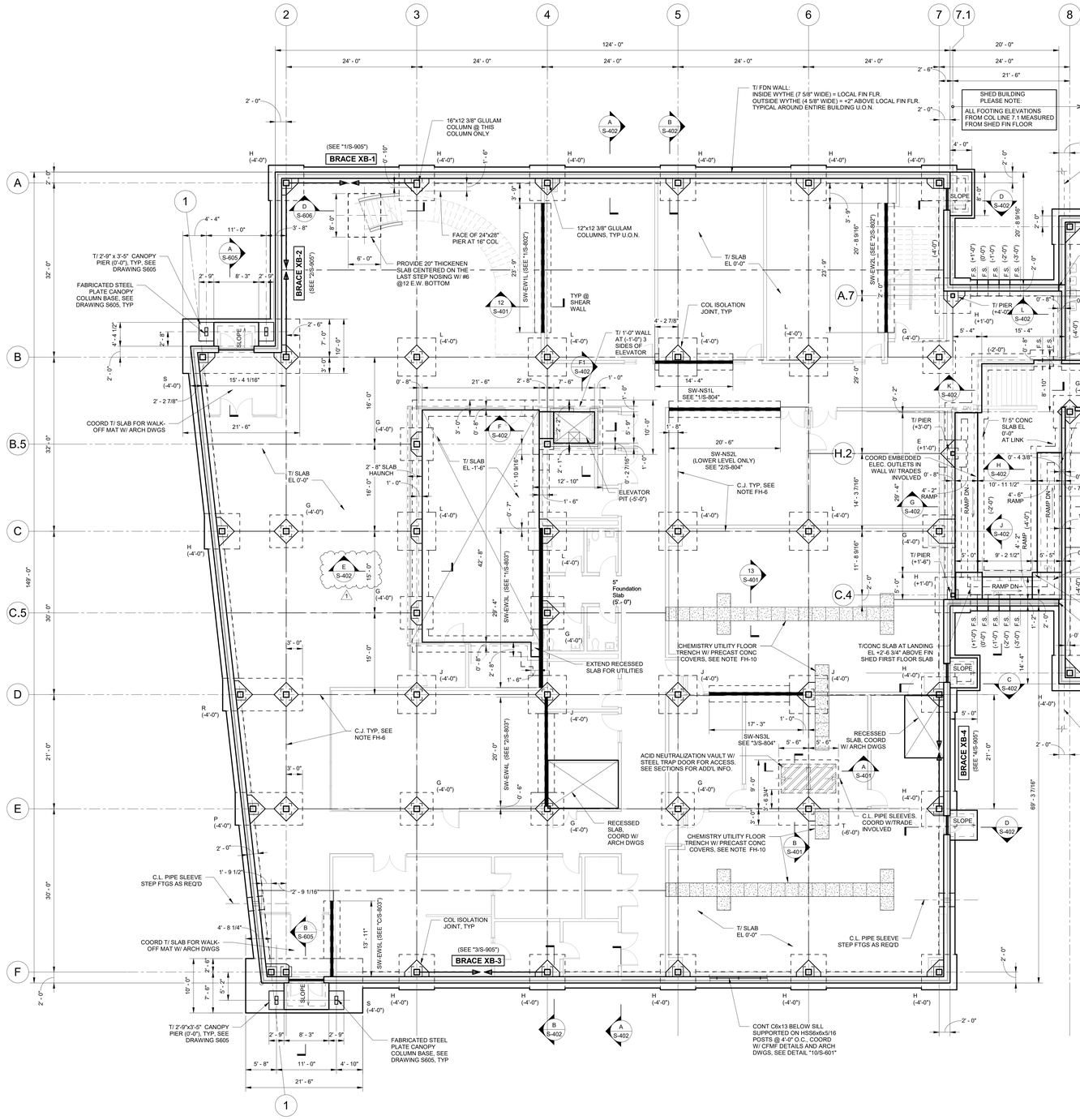
DRAWING TITLE:

FOUNDATION PLAN – OVERALL

PROJECT NO: 23000 | DATE: 9/23/25

PHASE: REBID & CONSTRUCTION | SCALE: As indicated

S-100



1 S-101 FOUNDATION PLAN - HEAD BLDG
1/8" = 1'-0"

FOUNDATION PLAN NOTES - HEAD BLDG:

FH-1. LOCAL PROJECT REF DATUM FOR THE HEAD BUILDING FINISH FIRST FLOOR IS AT ELEV. 583'-6" (LOCAL EL 0'-0") NOTE: THE LOCAL PROJECT REFERENCE DATUM EL 583'-6" FOR THE HEAD BUILDING FIRST FLOOR IS 5'-0" HIGHER THAN THE LOCAL PROJECT REF DATUM EL 578'-6" FOR THE SHED BUILDING FIRST FLOOR.

FH-2. A. SEE PLAN FOR TOP OF SLAB ELEVATIONS, MEASURED FROM REF DATUM IN NOTE FH-1

B. TOPS OF ALL NEW FOOTINGS ARE MEASURED FROM LOCAL REFERENCE DATUM IN NOTE FH-1 (TOP OF LOCAL FIN FIRST FLOOR) AND ARE SHOWN THUS (-5'-0") FROM LOCAL FIN FLOOR REFERENCE DATUM

FH-3. CONCRETE FLOOR SLABS ON GRADE SHALL BE 5" NORMAL WEIGHT CONCRETE W/ #4@12 E.W. TOP. SEE TYP DETAILS ON DRAWING S-401. SUPPORT REINFORCEMENT ON BAR SUPPORTS IN ACCORDANCE WITH THE SPECIFICATIONS AND ACCEPTABLE PRACTICES.

FH-4. SEE DWG S-401 FOR FOUNDATION DETAILS AND NOTES. SEE DRAWING S-904 FOR DESIGN PARAMETERS.

FH-5. GENERAL CONTRACTOR SHALL INSTALL SLEEVES PROVIDED BY PLUMBING AND ELECTRICAL CONSTRUCTION CONTRACTORS FOR PIPE PENETRATIONS THROUGH THE FOUNDATION WALLS AS REQ'D. COORDINATE SIZE, QUANTITY , LOCATION AND SEQUENCE OF PLACEMENT W/ TRADE INVOLVED.

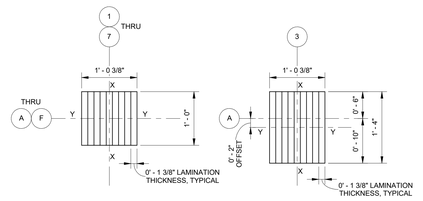
FH-6. SLAB CONSTRUCTION AND CRACK CONTROL JOINTS ARE SCHEMATICALLY SHOWN. CONTRACTOR MAY PROVIDE PLAN LAYOUT FOR PROPOSED ALTERNATE JOINT LOCATIONS FOR APPROVAL. SEE DRAWING S-401 FOR TYP JOINT DETAILS.

FH-7. SEE DRAWING S-100, NOTE BPSP-1 FOR BUILDING PAD SITE PREPARATION / GROUND IMPROVEMENTS GENERAL NOTES.

FH-8. ALL FOOTINGS SHALL BEAR ON A SATISFACTORILY INSTALLED LOAD TRANSFER PLATFORM (LTP), EXAMINED AND APPROVED BY THE INSPECTING PROFESSIONAL GEOTECHNICAL ENGINEER (IPGE), JUST PRIOR TO FOOTING CONSTRUCTION.

FH-9. ALL SLABS-ON GRADE SHALL BEAR ON A SATISFACTORILY INSTALLED SUBBASE COURSE, PLACED OVER A SATISFACTORILY INSTALLED LOAD TRANSFER PLATFORM (LTP), EXAMINED AND APPROVED BY THE INSPECTING PROFESSIONAL GEOTECHNICAL ENGINEER (IPGE), JUST PRIOR TO SLAB CONSTRUCTION.

FH-10. CHEMISTRY ROOM UTILITY TRENCHES: COORDINATE SIZE AND LOCATION OF TRENCHING WITH ALL TRADES INVOLVED. INTENT OF TRENCHES IS TO SUPPLY UTILITIES FROM WITHIN THE WALLS TO EACH BENCHTOP. SEE ARCH AND MEP DRAWINGS FOR ADD'L INFO. TRENCHES SHALL BE PROVIDED WITH PRECAST CONCRETE REMOVABLE COVERS. COORDINATE EXTENT OF COVERS WITH ALL TRADES INVOLVED.



2 S-101 WOOD COLUMN ORIENTATION PLAN - HEAD BLDG
1" = 1'-0"

NOTES:
1. ALL COLUMNS SHALL BE ORIENTED IN THE SAME DIRECTION AS SHOWN.
2. SEE DRAWING S-901 FOR WOOD COLUMN - STANDOFF SUPPORT POST ASSEMBLY DETAILS AT BASES OF ALL COLUMNS.

FOOTING SCHEDULE

FOOTING MARK	FOOTING SIZE	REINFORCEMENT
A	3'-0"x3'-0"x16"	6-#4 E.W. BOT
B	3'-6"x3'-6"x16"	4-#5 E.W. BOT
C	4'-0"x4'-0"x16"	5-#5 E.W. BOT
D	4'-6"x4'-6"x16"	6-#5 E.W. BOT
E	5'-0"x5'-0"x16"	7-#5 E.W. BOT
F	5'-6"x5'-6"x16"	7-#6 E.W. BOT
G	6'-0"x6'-0"x18"	7-#6 E.W. BOT
H	6'-6"x6'-6"x20"	7-#7 E.W. BOT
J	7'-0"x7'-0"x20"	8-#7 E.W. BOT
K	7'-6"x7'-6"x22"	9-#7 E.W. BOT
L	8'-0"x8'-0"x22"	10-#7 E.W. BOT
M	8'-6"x8'-6"x24"	9-#8 E.W. BOT
N	9'-0"x9'-0"x24"	10-#8 E.W. BOT
P	12'-0"x6'-0"x18"	7-#8 x 11'-6" T&B 14-#8 x 5'-6" T&B
R	14'-6"x6'-0"x18"	7-#8 x 14'-0" T&B 16-#8 x 5'-6" T&B
S	21'-6"x10'-0"x18"	12-#8 x 21'-0" T&B 23-#8 x 9'-6" T&B
T	12'-0"x11'-0"x18"	12-#8 x 10'-6" T&B 13-#8 x 11'-6" T&B

NOTE:
SOME MARKS SHOWN ON SCHEDULE MAY NOT OCCUR ON PLAN.

KEY:

- SHEAR WALLS ABOVE TO LOW ROOF AND SECOND FLOOR, SEE DWGS S-802 THRU S-804 FOR ADD'L INFO

BRACE - DIAGONAL STEEL ROD X-BRACING, SEE DWG S-905 FOR ADD'L INFO

ONEIDA COUNTY 1798 NEW YORK

MVCC
MOHAWK VALLEY COMMUNITY COLLEGE
1101 SHERMAN DRIVE
UTICA, NY 13501
(315) 792-5400

ARCHITECT:
MARCH ASSOCIATES ARCHITECTS & PLANNERS, PC
258 Genesee Street, Suite 300
Utica, New York 13501
315 733 3344

Mitchell Giurgola
Mitchell Giurgola Architects LLP
630 Ninth Avenue, Suite 711
New York, New York 10036
212 663 4000

STRUCTURAL ENGINEER:
Interactive Engineering Solutions, PC
1721 Black River Blvd, Suite L-1
Rome, NY 13440
315 339 7855
IE Solutions
Interactive Engineering Solutions P.C.
Certificate of Authorization No. 0023543
Expiration Date: 11/30/2027

MEP ENGINEER:
Towne Engineering
18 South Street
Utica, NY 13501
315 733 9000

SITE | CIVIL ENGINEER:
Appel Osborne Landscape Architecture
102 West Division Street, Suite 100
Syracuse, NY 13204
315 476 1022

SEAL:
STATE OF NEW YORK DOUGLAS R. CAHILL 061675 LICENSED PROFESSIONAL ENGINEER
Douglas R. Cahill, PE
NYS Professional Engineer No. 61675
Expiration Date 3/31/2026

ISSUE/REVISION:

NO:	DATE	COMMENTS
1	9/23/25	REBID & CONSTRUCTION

COPYRIGHT © 2018 MITCHELL GIURGOLA ARCHITECTS LLP
ALL DIMENSIONS AND EXISTING CONDITIONS SHALL BE CHECKED AND VERIFIED BY THE CONTRACTOR BEFORE PROCEEDING WITH THE WORK.

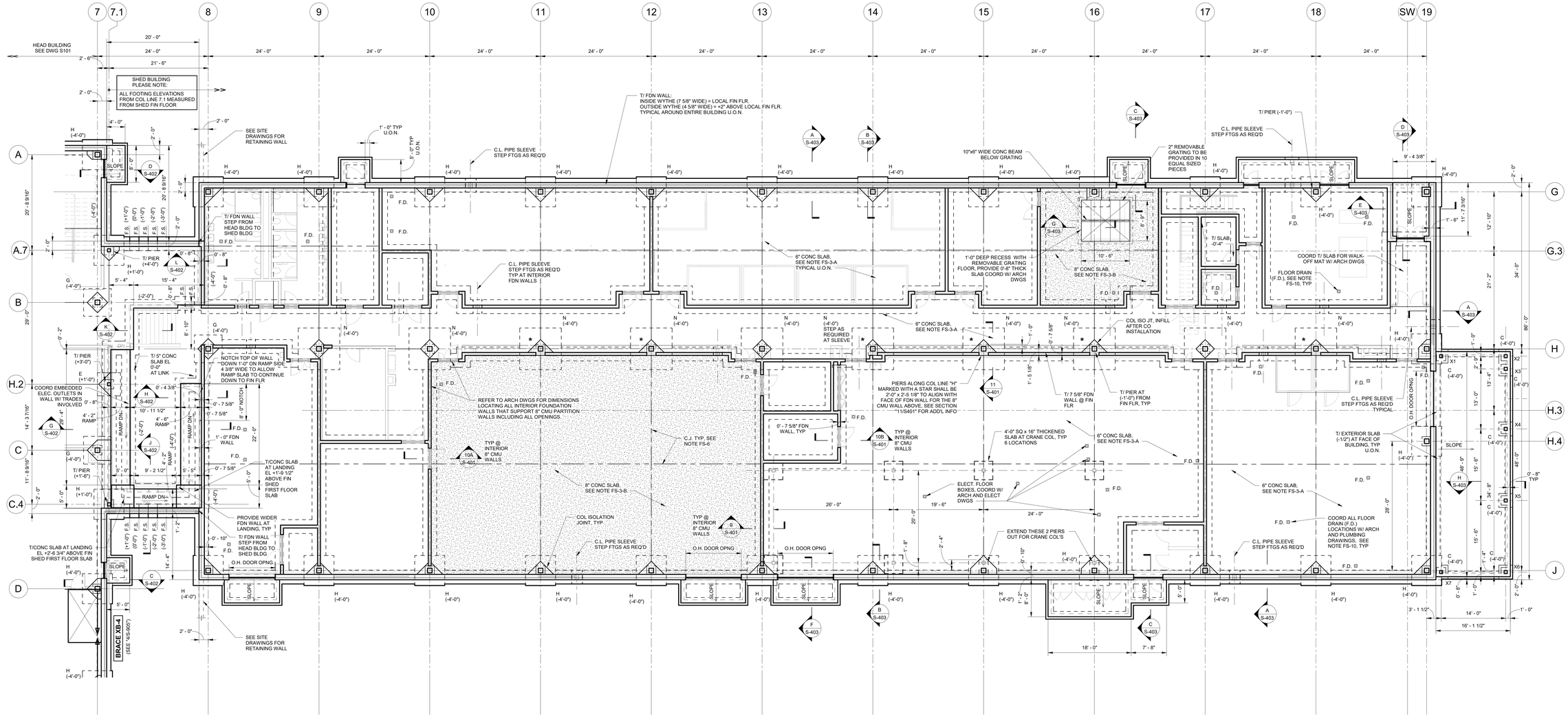
KEY PLAN:
PLAN NORTH

PROJECT:
SCIENCE & TECHNOLOGY BUILDING

DRAWING TITLE:
HEAD BUILDING – FOUNDATION PLAN

PROJECT NO: 23000 | DATE: 9/23/25
PHASE: REBID & CONSTRUCTION | SCALE: As indicated

S-101



1 S-102 FOUNDATION PLAN - SHED BLDG
1/8" = 1'-0"

FOUNDATION PLAN NOTES - SHED BLDG:

FS-1. LOCAL PROJECT REF DATUM FOR THE SHED BUILDING FINISH FIRST FLOOR IS AT ELEV. 578'-6" (LOCAL EL 0'-0")
NOTE: THE LOCAL PROJECT REFERENCE DATUM EL 578'-6" FOR THE SHED BUILDING FIRST FLOOR IS 5'-0" LOWER THAN THE LOCAL PROJECT REF DATUM EL 583'-6" FOR THE HEAD BUILDING FIRST FLOOR.

FS-2. A. SEE PLAN FOR TOP OF SLAB ELEVATIONS, MEASURED FROM REF DATUM IN NOTE FS-1

B. TOPS OF ALL FOOTINGS ARE MEASURED FROM LOCAL REFERENCE DATUM IN NOTE F-1 (TOP OF LOCAL FIN FIRST FLOOR) AND ARE SHOWN THUS (-5'-0") FROM LOCAL FIN FLOOR REFERENCE DATUM

FS-3. A. SHED CONCRETE FLOOR SLABS ON GRADE SHALL BE 6" NORMAL WEIGHT CONCRETE W/ #4@12 E.W. TOP U.O.N.. SEE TYP DETAILS ON DRAWING S-401. SUPPORT REINFORCEMENT ON BAR SUPPORTS IN ACCORDANCE WITH THE SPECIFICATIONS AND ACCEPTABLE PRACTICES.

B. SHADED SHED CONCRETE FLOOR SLABS ON GRADE SHALL BE 8" NORMAL WEIGHT CONCRETE W/ #4@12 E.W. TOP AND BOTTOM. SEE SECT "F/S-403". SUPPORT REINFORCEMENT ON BAR SUPPORTS IN ACCORDANCE WITH THE SPECIFICATIONS AND ACCEPTABLE PRACTICES.

FS-4. SEE DWG S-401 FOR FOUNDATION DETAILS AND NOTES. SEE DRAWING S-601 FOR DESIGN PARAMETERS.

FS-5. GENERAL CONTRACTOR SHALL INSTALL SLEEVES PROVIDED BY PLUMBING AND ELECTRICAL CONSTRUCTION CONTRACTORS FOR PIPE PENETRATIONS THROUGH THE FOUNDATION WALLS AS REQ'D. COORDINATE SIZE, QUANTITY , LOCATION AND SEQUENCE OF PLACEMENT W/ TRADE INVOLVED.

FS-6. SLAB CONSTRUCTION AND CRACK CONTROL JOINTS ARE SCHEMATICALLY SHOWN. CONTRACTOR MAY PROVIDE PLAN LAYOUT FOR PROPOSED ALTERNATE JOINT LOCATIONS FOR APPROVAL. SEE DRAWING S-401 FOR TYP JOINT DETAILS.

FS-7. SEE DRAWING S-100, NOTE BPSP-1 FOR BUILDING PAD SITE PREPARATION / GROUND IMPROVEMENTS GENERAL NOTES.

FS-8. ALL FOOTINGS SHALL BEAR ON A SATISFACTORILY INSTALLED LOAD TRANSFER PLATFORM (LTP), EXAMINED AND APPROVED BY THE INSPECTING PROFESSIONAL GEOTECHNICAL ENGINEER (IPGE), JUST PRIOR TO FOOTING CONSTRUCTION.

FS-9. ALL SLABS-ON GRADE SHALL BEAR ON A SATISFACTORILY INSTALLED SUBBASE COURSE, PLACED OVER A SATISFACTORILY INSTALLED LOAD TRANSFER PLATFORM (LTP), EXAMINED AND APPROVED BY THE INSPECTING PROFESSIONAL GEOTECHNICAL ENGINEER (IPGE), JUST PRIOR TO SLAB CONSTRUCTION.

FS-10. G.C. SHALL COORDINATE W/ ARCHITECTURAL AND PLUMBIMG DRAWINGS FOR ANY REQUIRED SLOPED SLAB ON GRADES TO FLOOR DRAINS (F.D.).

FS-11. HOUSE KEEPING CONCRETE PADS NOT SHOWN. REFER TO TRADE INVOLVED FOR REQUIREMENTS.

FOOTING SCHEDULE

FOOTING MARK	FOOTING SIZE	REINFORCEMENT
A	3'-0"x3'-0"x16"	6-#4 E.W. BOT
B	3'-6"x3'-6"x16"	4-#5 E.W. BOT
C	4'-0"x4'-0"x16"	5-#5 E.W. BOT
D	4'-6"x4'-6"x16"	6-#5 E.W. BOT
E	5'-0"x5'-0"x16"	7-#5 E.W. BOT
F	5'-6"x5'-6"x16"	7-#6 E.W. BOT
G	6'-0"x6'-0"x18"	7-#6 E.W. BOT
H	6'-6"x6'-6"x20"	7-#7 E.W. BOT
J	7'-0"x7'-0"x20"	8-#7 E.W. BOT
K	7'-6"x7'-6"x22"	9-#7 E.W. BOT
L	8'-0"x8'-0"x22"	10-#7 E.W. BOT
M	8'-6"x8'-6"x24"	9-#8 E.W. BOT
N	9'-0"x9'-0"x24"	10-#8 E.W. BOT
P	12'-0"x6'-0"x18"	7-#8 x 11'-6" T&B 14-#8 x 5'-6" T&B
R	14'-6"x6'-0"x18"	7-#8 x 14'-0" T&B 16-#8 x 5'-6" T&B
S	21'-6"x10'-0"x18"	12-#8 x 21'-0" T&B 23-#8 x 9'-6" T&B
T	12'-0"x11'-0"x18"	12-#8 x 10'-6" T&B 13-#8 x 11'-6" T&B

NOTE:
SOME MARKS SHOWN ON SCHEDULE MAY NOT OCCUR ON PLAN.

ONEIDA COUNTY NEW YORK 1798

MVCC
MOHAWK VALLEY COMMUNITY COLLEGE
1101 SHERMAN DRIVE
UTICA, NY 13501
(315) 792-5400

ARCHITECT:
MARCH ASSOCIATES ARCHITECTS & PLANNERS, PC
258 Genesee Street, Suite 300
Utica, New York 13501
315 733 3344

Mitchell Giurgola
Mitchell Giurgola Architects LLP
630 Ninth Avenue, Suite 711
New York, New York 10036
212 663 4000

STRUCTURAL ENGINEER:
Interactive Engineering Solutions, PC
1721 Black River Blvd, Suite L-1
Rome, NY 13440
315 339 7855
IE Solutions
Interactive Engineering Solutions P.C.
Certificate of Authorization No. 0022543
Expiration Date: 11/30/2027

MEP ENGINEER:
Towne Engineering
18 South Street
Utica, NY 13501
315 733 9000

SITE | CIVIL ENGINEER:
Appel Osborne Landscape Architecture
102 West Division Street, Suite 100
Syracuse, NY 13204
315 476 1022

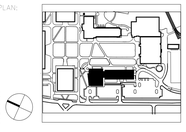
SEAL:
STATE OF NEW YORK DOUGLAS R. CAHILL 081675 PROFESSIONAL ENGINEER
Douglas R. Cahill, PE
NYS Professional Engineer No. 81675
Expiration Date 3/31/2026

ISSUE/REVISION:

NO.	DATE	COMMENTS
1	9/23/25	REBID & CONSTRUCTION

CONTRACTOR TO REVIEW, COORDINATE AND VERIFY ALL DIMENSIONS AND EXISTING CONDITIONS SHALL BE CHECKED AND VERIFIED BY THE CONTRACTOR BEFORE PROCEEDING WITH THE WORK.

KEY PLAN:

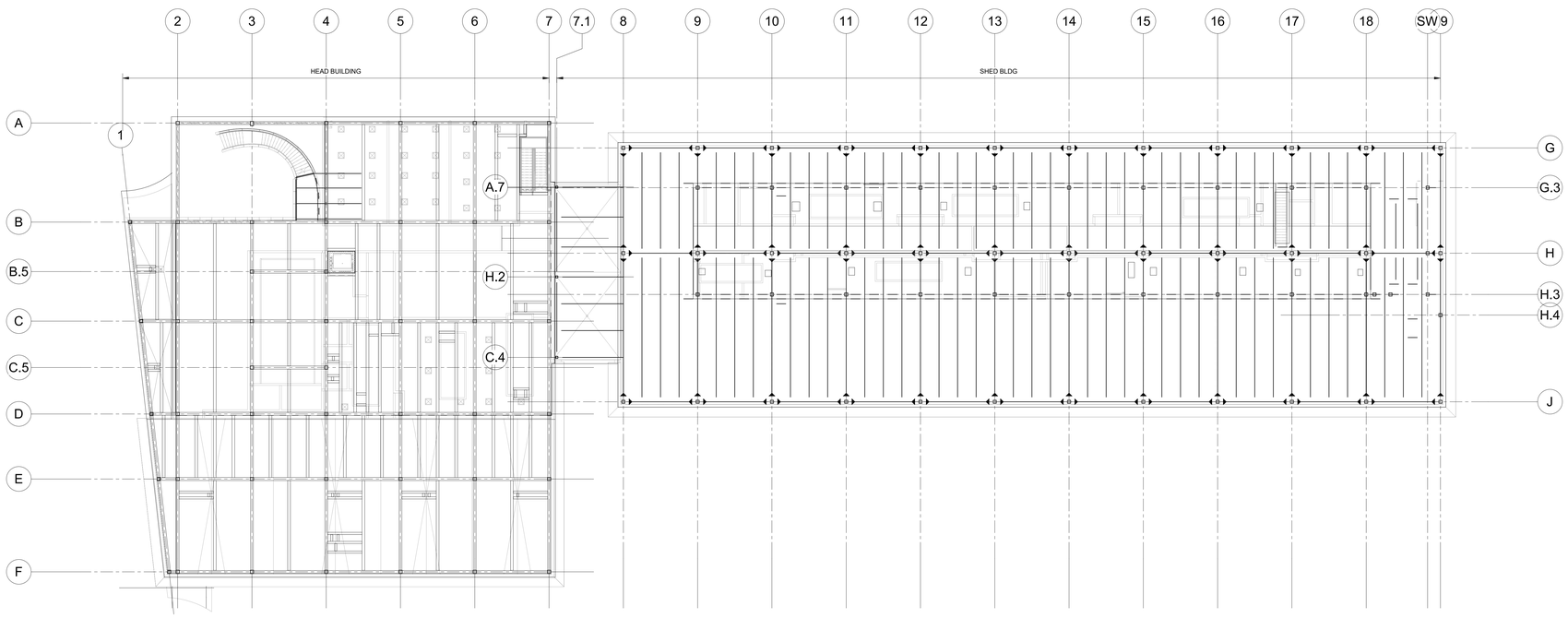


PROJECT T:
SCIENCE & TECHNOLOGY BUILDING

DRAWING TITLE:
SHED BUILDING – FOUNDATION PLAN

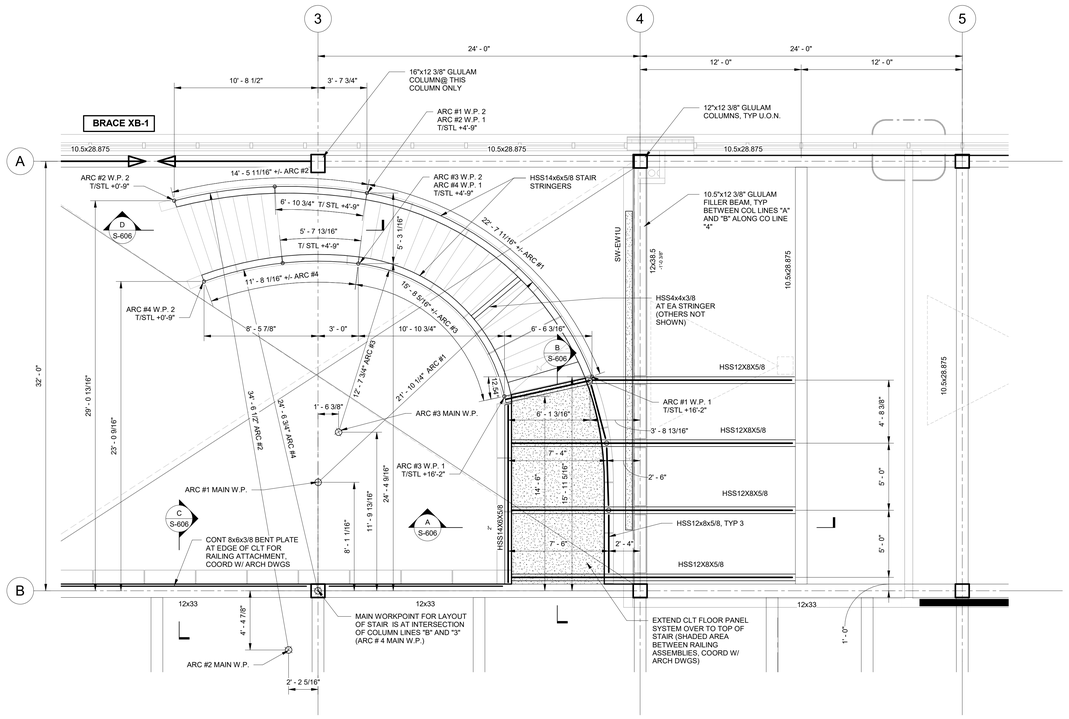
PROJECT NO: 23000 | DATE: 9/23/25
PHASE: REBID & CONSTRUCTION | SCALE: 1/8" = 1'-0"

S-102

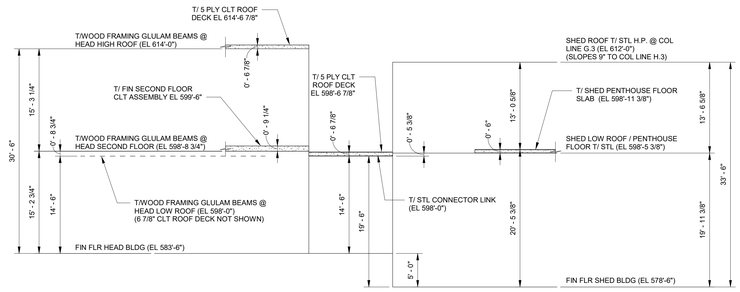


1 S-200 LOW ROOF / SECOND FLOOR / PENTHOUSE FRAMING PLAN - OVERALL
1/16" = 1'-0"

NOTES:
SEE DWGS S-201 AND S-202 FOR PLAN NOTES FOR HEAD AND SHED BUILDINGS, RESPECTIVELY.



2 S-200 LOW ROOF / SECOND FLOOR FRAMING PLAN - HEAD BLDG
1/4" = 1'-0"



BUILDING ELEVATION DIAGRAM

ONEIDA COUNTY NEW YORK 1798

MVCC
MOHAWK VALLEY COMMUNITY COLLEGE

1101 SHERMAN DRIVE
UTICA, NY 13501
(315) 792-5400

ARCHITECT:

MARCH ASSOCIATES
ARCHITECTS & PLANNERS, PC

258 Genesee Street, Suite 300
Utica, New York 13501
315 733 3344

Mitchell Giurgola

Mitchell Giurgola Architects LLP
630 Ninth Avenue, Suite 711
New York, New York 10036
212 663 4000

STRUCTURAL ENGINEER:
Interactive Engineering Solutions, PC
1721 Black River Blvd, Suite L-1
Rome, NY 13440
315 339 7855

IE Solutions
Interactive Engineering Solutions P.C.
Certificate of Authorization No. 0023543
Expiration Date: 11/30/2027

MEP ENGINEER:
Towne Engineering
18 South Street
Utica, NY 13501
315 733 9000

SITE | CIVIL ENGINEER:
Appel Osborne Landscape Architecture
102 West Division Street, Suite 100
Syracuse, NY 13204
315 476 1022

SEAL:

STATE OF NEW YORK DOUGLAS R. CAHILL 61675 LICENSED PROFESSIONAL ENGINEER

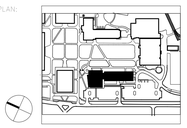
Douglas R. Cahill, PE
NYS Professional Engineer No. 61675
Expiration Date 3/31/2026

ISSUE/REVISIONS:

NO.	DATE	COMMENTS
1	9/23/25	REBID & CONSTRUCTION

COPYRIGHT © 2024 MITCHELL GIURGOLA ARCHITECTS LLP
ALL DIMENSIONS AND EXISTING CONDITIONS SHALL BE CHECKED AND VERIFIED BY THE CONTRACTOR BEFORE PROCEEDING WITH THE WORK.

KEY PLAN:



PLAN NORTH

PROJECT TI

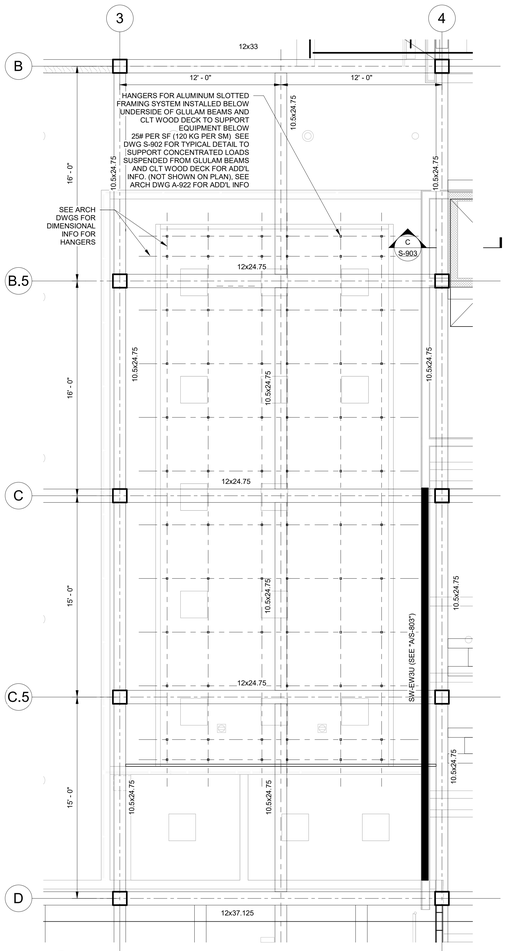
SCIENCE & TECHNOLOGY BUILDING

DRAWING TITLE:

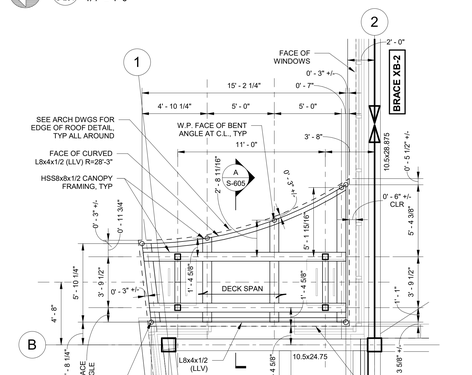
LOW ROOF / SECOND FLOOR / PENTHOUSE FRAMING PLAN – OVERALL

PROJECT NO: 23000	DATE: 9/23/25
PHASE: REBID & CONSTRUCTION	SCALE: As indicated

S-200

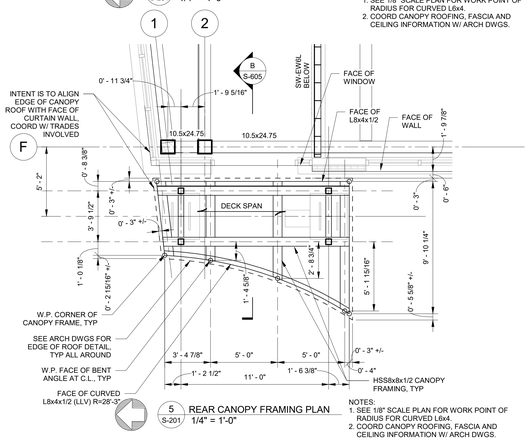


2 / S-201 AUTOMATION TRAINING CENTER UNISTRUT FRAMING PLAN - HEAD BLDG
1/4" = 1'-0"



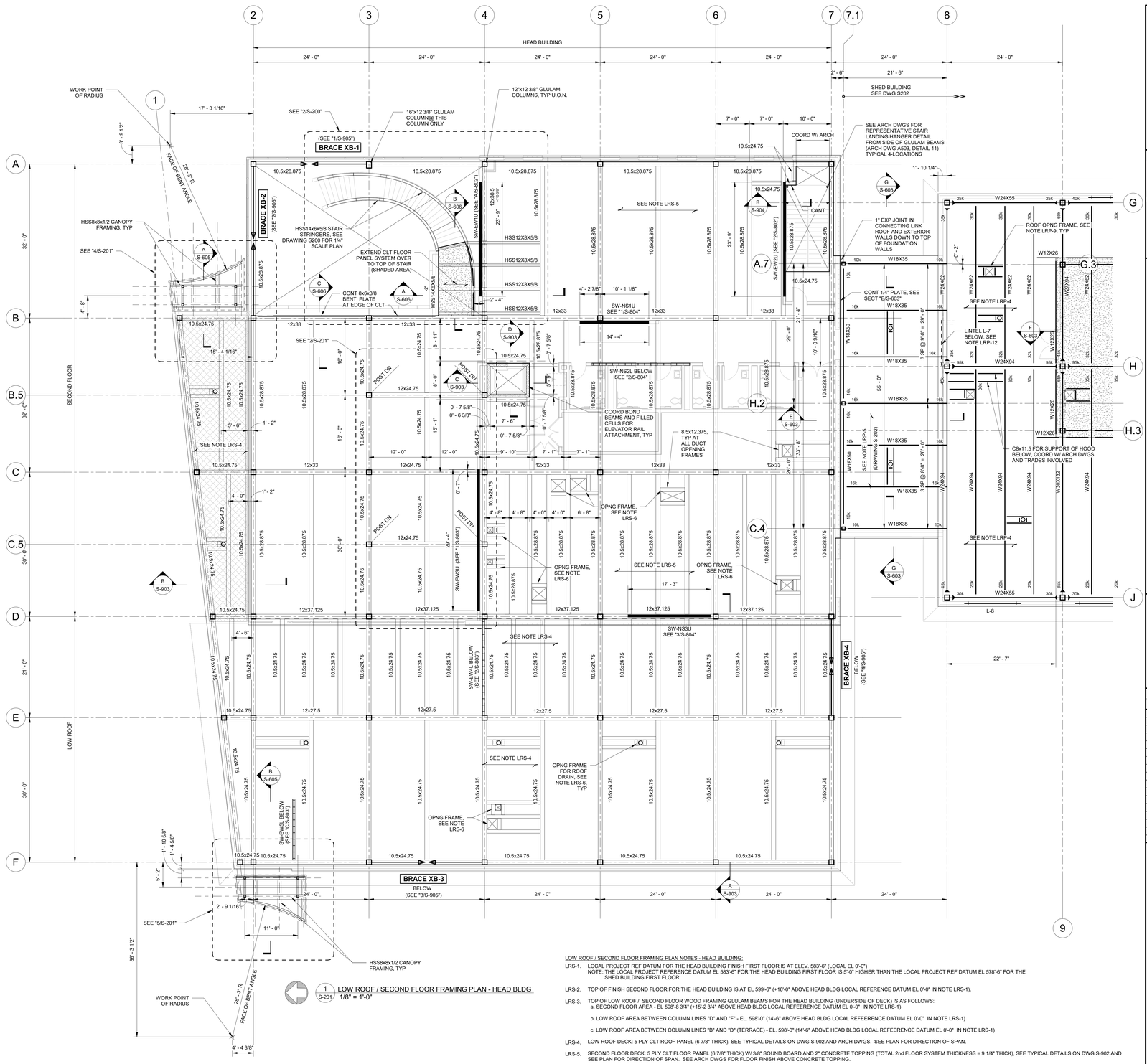
4 / S-201 MAIN CANOPY ROOF FRAMING PLAN
1/4" = 1'-0"

NOTES:
1. SEE 1/8" SCALE PLAN FOR WORK POINT OF RADIUS FOR CURVED L6x4.
2. COORD CANOPY ROOFING, FASCIA AND CEILING INFORMATION W/ ARCH DWGS.



5 / S-201 REAR CANOPY FRAMING PLAN
1/4" = 1'-0"

NOTES:
1. SEE 1/8" SCALE PLAN FOR WORK POINT OF RADIUS FOR CURVED L6x4.
2. COORD CANOPY ROOFING, FASCIA AND CEILING INFORMATION W/ ARCH DWGS.



1 / S-201 LOW ROOF / SECOND FLOOR FRAMING PLAN - HEAD BLDG
1/8" = 1'-0"

GLULAM BEAM CONNECTION REACTIONS (UN-FACTORED) (MEMBERS IN NORTH / SOUTH DIRECTION)	
MEMBER DESCRIPTION	MAX END REACTION (UN-FACTORED GRAVITY LOADS) - KIPS
COL LINE A - 10.5x28.875	25 KIPS
COL LINE B - 12x33	40 KIPS
COL LINE B.5 - 12x24.75	25 KIPS
COL LINE C - 12x33	55 KIPS
COL LINE C - 12x24.75	25 KIPS
COL LINE C.5 - 12x24.75	25 KIPS
COL LINE D - 12x37.125	50 KIPS
COL LINE E - 12x27.5	30 KIPS
COL LINE F - 10.5x24.75	20 KIPS

NOTE: FOR MEMBERS NOT LISTED, THE MAXIMUM UN-FACTORED FDN REACTIONS ARE LESS THAN OR EQUAL TO 10 KIPS.

GLULAM BEAM CONNECTION REACTIONS (UN-FACTORED) (MEMBERS IN EAST / WEST DIRECTION)	
MEMBER DESCRIPTION	MAX END REACTION (UN-FACTORED GRAVITY LOADS) - KIPS
COL LINE 1 - 10.5x24.75	20 KIPS
COL LINE 2 - 10.5x28.875	30 KIPS
COL LINE 2 - 10.5x24.75	20 KIPS
COL LINE 3 - 10.5x24.75	30 KIPS
COL LINE 4 - 12x38.5	62 KIPS
COL LINE 4 - 10.5x24.75	30 KIPS
COL LINE 5 & 6 - 10.5x28.875	40 KIPS
COL LINE 5 & 6 - 10.5x24.75	30 KIPS
COL LINE 7 - 10.5x28.875	30 KIPS
COL LINE 7 - 10.5x24.75	20 KIPS
FILLER BEAMS (BETWEEN COL LINES) - 10.5x28.875	40 KIPS
FILLER BEAMS (BETWEEN COL LINES) - 10.5x24.75	30 KIPS

NOTE: FOR MEMBERS NOT LISTED, THE MAXIMUM UN-FACTORED FDN REACTIONS ARE LESS THAN OR EQUAL TO 10 KIPS.

LOW ROOF / SECOND FLOOR FRAMING PLAN NOTES - HEAD BUILDING:

LRS-1. LOCAL PROJECT REF DATUM FOR THE HEAD BUILDING FINISH FIRST FLOOR IS AT ELEV. 583'-6" (LOCAL EL 0'-0")
NOTE: THE LOCAL PROJECT REFERENCE DATUM EL 583'-6" FOR THE HEAD BUILDING FIRST FLOOR IS 5'-0" HIGHER THAN THE LOCAL PROJECT REF DATUM EL 578'-6" FOR THE SHED BUILDING FIRST FLOOR.

LRS-2. TOP OF FINISH SECOND FLOOR FOR THE HEAD BUILDING IS AT EL 599'-6" (+16'-0" ABOVE HEAD BLDG LOCAL REFERENCE DATUM EL 0'-0" IN NOTE LRS-1).

LRS-3. TOP OF LOW ROOF / SECOND FLOOR WOOD FRAMING GLULAM BEAMS FOR THE HEAD BUILDING (UNDERSIDE OF DECK) IS AS FOLLOWS:
a. SECOND FLOOR AREA - EL 598'-8 3/4" (+15'-2 3/4" ABOVE HEAD BLDG LOCAL REFEERENCE DATUM EL 0'-0" IN NOTE LRS-1)
b. LOW ROOF AREA BETWEEN COLUMN LINES "D" AND "F" - EL. 598'-0" (14'-6" ABOVE HEAD BLDG LOCAL REFEERENCE DATUM EL 0'-0" IN NOTE LRS-1)
c. LOW ROOF AREA BETWEEN COLUMN LINES "B" AND "D" (TERRACE) - EL. 598'-0" (14'-6" ABOVE HEAD BLDG LOCAL REFEERENCE DATUM EL 0'-0" IN NOTE LRS-1)

LRS-4. LOW ROOF DECK: 5 PLY CLT ROOF PANEL (6 7/8" THICK), SEE TYPICAL DETAILS ON DWG S-902 AND ARCH DWGS. SEE PLAN FOR DIRECTION OF SPAN.

LRS-5. SECOND FLOOR DECK: 5 PLY CLT FLOOR PANEL (6 7/8" THICK) W/ 3/8" SOUND BOARD AND 2" CONCRETE TOPPING (TOTAL 2nd FLOOR SYSTEM THICKNESS = 9 1/4" THICK), SEE TYPICAL DETAILS ON DWG S-902 AND SEE PLAN FOR DIRECTION OF SPAN. SEE ARCH DWGS FOR FLOOR FINISH ABOVE CONCRETE TOPPING.

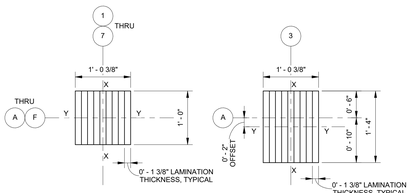
LRS-6. PROVIDE ROOF AND FLOOR OPENING FRAMES FOR ALL OPENINGS GREATER THAN OR EQUAL TO 12" IN ANY DIRECTION. CONTRACTOR SHALL REVIEW ALL CONTRACT DRAWINGS FOR OPENINGS REQUIRED AND COORDINATE OPENING SIZES AND LOCATIONS WITH APPROVED EQUIPMENT OR ACCESSORIES SHOP DRAWINGS AND TRADE INVOLVED.

LRS-7. PROVIDE SUPPORT FRAMING FOR MECHANICAL EQUIPMENT. CONTRACTOR SHALL REVIEW ALL CONTRACT DRAWINGS FOR MECHANICAL EQUIPMENT REQUIRED AND COORDINATE ALL DIMENSIONAL REQUIREMENTS FOR SUPPORT FRAMING (INCLUDING SIZES AND LOCATIONS) WITH APPROVED EQUIPMENT OR ACCESSORIES SHOP DRAWINGS AND TRADE INVOLVED.

LRS-8. SEE DWG S-902 FOR ADDITIONAL TYPICAL FRAMING DETAILS AND DRAWING S-904 FOR DESIGN PARAMETERS AND GENERAL NOTES. SEE DRAWING S601 FOR STEEL NOTES.

LRS-9. REFER TO TABLES THIS SHEET FOR GLULAM BEAM MAXIMUM CONNECTION REACTIONS (UN-FACTORED GRAVITY LOADS)

LRS-10. HORIZONTAL PENETRATIONS THROUGH GLULAM BEAMS MAY BE REQUIRED FOR LATERAL DISTRIBUTION OF MECHANICAL AND ELECTRICAL SYSTEMS AND ARE NOT SHOWN ON THIS DRAWING. REFER TO ARCH DWG A-870 AND STRUCTURAL DWG S-902 FOR SPECIFIC INFORMATION REGARDING THESE PENETRATIONS. THE CONTRACTOR RESPONSIBLE FOR THE GLULAM BEAM SYSTEMS SHALL COORD ALL REQ'D PENETRATIONS (SIZE AND LOCATIONS) W/ TRADES INVOLVED.



3 / S-201 WOOD COLUMN ORIENTATION PLAN - HEAD BLDG
1" = 1'-0"

NOTES:
1. ALL COLUMNS SHALL BE ORIENTED IN THE SAME DIRECTION AS SHOWN.
2. SEE DRAWING S-901 FOR WOOD COLUMN - STANDOFF SUPPORT POST ASSEMBLY DETAILS AT BASES OF ALL COLUMNS.

KEY:

- DESIGNATES MOMENT FRAME CONNECTION AT THE SHED BLDG SEE TYPICAL DETAILS ON DWG S-602
- SHEAR WALLS ABOVE TO HIGH ROOF, SEE DWGS S-802 THRU S-804 FOR ADD'L INFO
- SHEAR WALLS BELOW TO FIRST FLOOR, SEE DWGS S-802 THRU S-804 FOR ADD'L INFO
- DIAGONAL STEEL ROD X-BRACING, SEE DWG S-905 FOR ADD'L INFO (BRACE)

ONEIDA COUNTY NEW YORK 1798

MVCC
MOHAWK VALLEY COMMUNITY COLLEGE
1101 SHERMAN DRIVE
UTICA, NY 13501
(315) 792-5400

ARCHITECT:
MARCH ASSOCIATES ARCHITECTS & PLANNERS, PC
258 Genesee Street, Suite 300
Utica, New York 13501
315 733 3344

Mitchell Giurgola
Mitchell Giurgola Architects LLP
630 Ninth Avenue, Suite 711
New York, New York 10036
212 663 4000

STRUCTURAL ENGINEER:
Interactive Engineering Solutions, PC
1721 Black River Blvd, Suite L-1
Rome, NY 13440
315 339 7855
IE Solutions
Interactive Engineering Solutions, PC
Interactive Engineering Solutions P.C.
Certificate of Authorization No. 0023543
Expiration Date: 11/30/2027

MEP ENGINEER:
Towne Engineering
18 South Street
Utica, NY 13501
315 733 9000

SITE | CIVIL ENGINEER:
Appel Osborne Landscape Architecture
102 West Division Street, Suite 100
Syracuse, NY 13204
315 476 1022

SEAL:
STATE OF NEW YORK DOUGLAS R. CAHILL 61675 LICENSED PROFESSIONAL ENGINEER
Douglas R. Cahill, PE
NYS Professional Engineer No. 61675
Expiration Date 3/31/2026

ISSUE/REVISION:

NO.	DATE	COMMENTS
1	9/23/25	REBID & CONSTRUCTION

COPYRIGHT © 2025
ALL DIMENSIONS AND EXISTING CONDITIONS SHALL BE CHECKED AND VERIFIED BY THE CONTRACTOR BEFORE PROCEEDING WITH THE WORK.

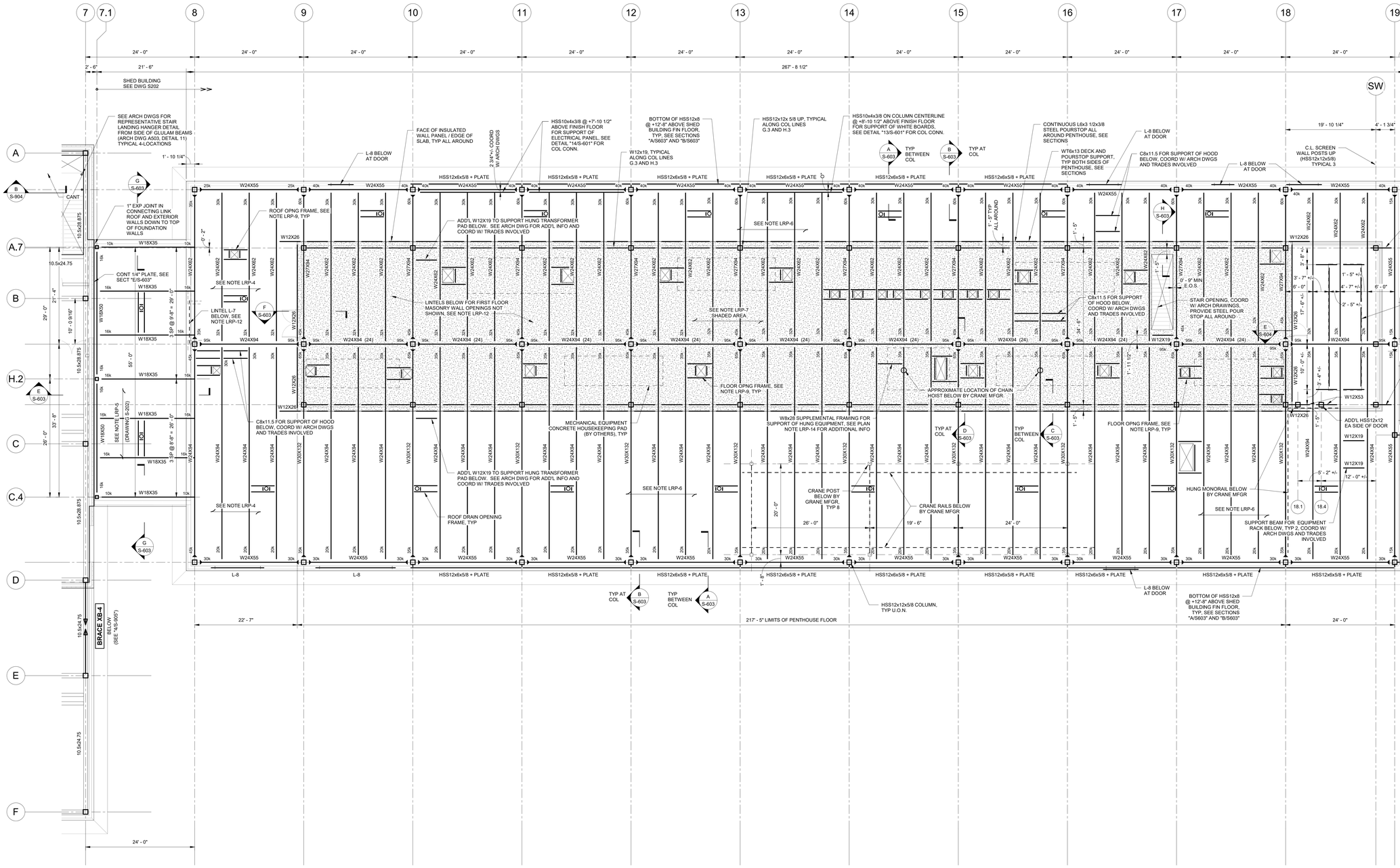
KEY PLAN:
PLAN NORTH

PROJECT:
SCIENCE & TECHNOLOGY BUILDING

DRAWING TITLE:
HEAD BUILDING – LOW ROOF / SECOND FLOOR FRAMING PLAN

PROJECT NO: 23000 | DATE: 9/23/25
PHASE: REBID & CONSTRUCTION | SCALE: As Indicated

S-201



1 S-202 LOW ROOF / PENTHOUSE FLOOR FRAMING PLAN - SHED BLDG
1/8" = 1'-0"

LOW ROOF / PENTHOUSE FLOOR FRAMING PLAN NOTES - SHED BLDG:

LRP-1. LOCAL PROJECT REF DATUM FOR THE SHED BUILDING FINISH FIRST FLOOR IS AT ELEV. 578'-6" (LOCAL EL 0'-0")
NOTE: THE LOCAL PROJECT REFERENCE DATUM EL 578'-6" FOR THE SHED BUILDING FIRST FLOOR IS 5'-0" LOWER THAN THE LOCAL PROJECT REF DATUM EL 583'-6" FOR THE HEAD BUILDING FIRST FLOOR.

LRP-2. TOP OF PENTHOUSE FLOOR CONCRETE SLAB FOR THE SHED BUILDING IS AT EL 598'-11 3/8" (+20'-5 3/8" ABOVE SHED BLDG LOCAL REFERENCE DATUM EL 0'-0" IN NOTE LRP-1).

LRP-3. TOP OF LOW ROOF / PENTHOUSE FLOOR STEEL (UNDERSIDE OF DECK) FOR THE SHED BUILDING IS AT EL 598'-5 3/8" (+19'-11 3/8" ABOVE SHED BLDG LOCAL REFEERENCE DATUM EL 0'-0" IN NOTE LRP-1)

LRP-4. TOP OF LOW ROOF STEEL FOR THE SHED / HEAD CONNECTOR (UNDERSIDE OF DECK BETWEEN COL LINES 7.1 AND 8) IS AT EL 598'-0" (+ 19'-6" ABOVE SHED BLDG LOCAL REFEERENCE DATUM EL 0'-0" IN NOTE LRP-1)

LRP-5. CONNECTOR LOW ROOF DECK: 5 PLY CLT ROOF PANEL (6 7/8" THICK), SEE TYPICAL DETAILS ON DWG S902 AND ARCH DWGS. SEE PLAN FOR DIRECTION OF SPAN.

LRP-6. SHED LOW ROOF DECK: 1 ½", 20 GA GALVANIZED AND SHOP PRIMED WIDE RIB TYPE B METAL ROOF DECK. ALL GALVANIZING AND SHOP PRIMING REQUIREMENTS SHALL BE COMPATIBLE WITH FINISH PAINT SYSTEM. G.C. SHALL COORDINATE ALL FINISH PAINTING REQUIREMENTS WITH ARCHITECTURAL ROOM FINISH SCHEDULE. SEE PLAN FOR DIRECTION OF SPAN AND TYPICAL ATTACHMENT DETAILS ON DRAWING S601. CONTRACTOR SHALL COORDINATED LOCATION OF EDGE OF DECK (E.O.D.) SUPPORT STEEL W/ ARCHITECTURAL DETAILS.

LRP-7. PENTHOUSE FLOOR DECK: 1 ½", 20 GA GALVANIZED AND SHOP PRIMED WIDE RIB TYPE B COMPOSITE METAL FLOOR DECK. ALL GALVANIZING AND SHOP PRIMING REQUIREMENTS SHALL BE COMPATIBLE WITH FINISH PAINT SYSTEM. G.C. SHALL COORDINATE ALL FINISH PAINTING REQUIREMENTS WITH ARCHITECTURAL ROOM FINISH SCHEDULE. SEE PLAN FOR DIRECTION OF SPAN AND TYPICAL ATTACHMENT DETAILS ON DRAWING S601. CONTRACTOR SHALL COORDINATED LOCATION OF EDGE OF DECK (E.O.D.) SUPPORT STEEL W/ ARCHITECTURAL DETAILS

LRP-8. PENTHOUSE FLOOR CONCRETE SLAB: 6" NORMAL WEIGHT CONCRETE (1 1/2" METAL DECK PLUS 4 1/2" CONCRETE ABOVE METAL DECK) REINFORCED W/ #4@12 E.W. PROVIDE PERIMETER REINFORCEMENT AND GIRDER REINF PER TYP DETAILS ON DWG S-601. SEE PLAN FOR ADD'L INFO.

LRP-9. PROVIDE ROOF AND FLOOR OPENING FRAMES PER TYPICAL DETAILS ON DWG S-601 FOR ALL OPENINGS GREATER THAN OR EQUAL TO 12" IN ANY DIRECTION. CONTRACTOR SHALL REVIEW ALL CONTRACT DRAWINGS FOR OPENINGS REQUIRED AND COORDINATE OPENING SIZES AND LOCATIONS WITH APPROVED EQUIPMENT OR ACCESSORIES SHOP DRAWINGS AND TRADE INVOLVED.

LRP-10. PROVIDE SUPPORT FRAMING FOR MECHANICAL EQUIPMENT PER TYPICAL DETAILS ON DWG S-601. CONTRACTOR SHALL REVIEW ALL CONTRACT DRAWINGS FOR MECHANICAL EQUIPMENT REQUIRED AND COORDINATE ALL DIMENSIONAL REQUIREMENTS FOR SUPPORT FRAMING (INCLUDING SIZES AND LOCATIONS) WITH APPROVED EQUIPMENT OR ACCESSORIES SHOP DRAWINGS AND TRADE INVOLVED.

LRP-11. SEE DWG S-601 FOR TYPICAL FRAMING DETAILS, DESIGN PARAMETERS AND GENERAL NOTES.

LRP-12. LINTELS FOR FIRST FLOOR MASONRY WALL OPENINGS TYPICALLY NOT SHOWN. COORD SIZE AND LOCATIONS W/ TRADES INVOLVED. SEE DRAWING S-501 FOR LINTEL SCHEDULE.

LRP-13. HUNG MONORAILS AND ASSOCIATED BRACING PROVIDED BY SPECIALTY CONTRACTOR NOT SHOWN. COORD ALL DETAILS FOR SUPPORT W/ TRADE INVOLVED. BEAMS SUPPORTING THE HUNG MONORAIL HAVE BEEN DESIGNED TO SUPPORT A CONCENTRATED LOAD OF 2500 POUNDS.

LRP-14. PROVIDE W8x28 SUPPLEMENTAL FRAMING FOR SUPPORT OF HUNG EXHAUST SNORKELS / CORD REELS AND HUNG CORD / AIR HOSE REELS AS SHOWN IN DETAILS "12A/S-601" AND "12B/S-601" RESPECTIVELY. REFER TO ARCH DRAWINGS FOR QUANTITIES AND LOCATIONS OF EACH HUNG SYSTEM. ALSO REFER TO ARCH DETAILS "11", "12", "15" AND "16" ON ARCH DWG A-910 FOR ADD'L INFO.

KEY:

- DESIGNATES MOMENT FRAME CONNECTION SEE TYPICAL DETAILS ON DWG S-602

XX - DESIGNATES MEMBER UN-FACTORED END REACTIONS (GRAVITY LOADS).

FOR MEMBERS NOT LABELED, UN-FACTORED END REACTION LESS THAN OR EQUAL TO 10 KIPS

ONEIDA COUNTY NEW YORK 1798

MVCC
MOHAWK VALLEY COMMUNITY COLLEGE
1101 SHERMAN DRIVE
UTICA, NY 13501
(315) 792-5400

ARCHITECT:
MARCH ASSOCIATES ARCHITECTS & PLANNERS, PC
258 Genesee Street, Suite 300
Utica, New York 13501
315 733 3344

Mitchell Giurgola
Mitchell Giurgola Architects LLP
630 Ninth Avenue, Suite 711
New York, New York 10036
212 663 4000

STRUCTURAL ENGINEER:
Interactive Engineering Solutions, PC
1721 Black River Blvd, Suite L-1
Rome, NY 13440
315 339 7855
IE Solutions
Interactive Engineering Solutions P.C.
Certificate of Authorization No. 0023543
Expiration Date: 11/30/2027

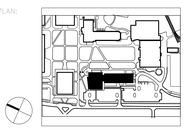
MEP ENGINEER:
Towne Engineering
18 South Street
Utica, NY 13501
315 733 9000

SITE | CIVIL ENGINEER:
Appel Osborne Landscape Architecture
102 West Division Street, Suite 100
Syracuse, NY 13204
315 476 1022

SEAL:
STATE OF NEW YORK DOUGLAS R. CAHILL 61675 PROFESSIONAL ENGINEER
Douglas R. Cahill, PE
NYS Professional Engineer No. 61675
Expiration Date 3/31/2026

ISSUE/REVISION:		
NO.	DATE	COMMENTS
1	9/23/25	REBID & CONSTRUCTION

NOTICE: © 2025 MITCHELL GIURGOLA ARCHITECTS LLP
ALL DIMENSIONS AND EXISTING CONDITIONS SHALL BE CHECKED AND VERIFIED BY THE CONTRACTOR BEFORE PROCEEDING WITH THE WORK.

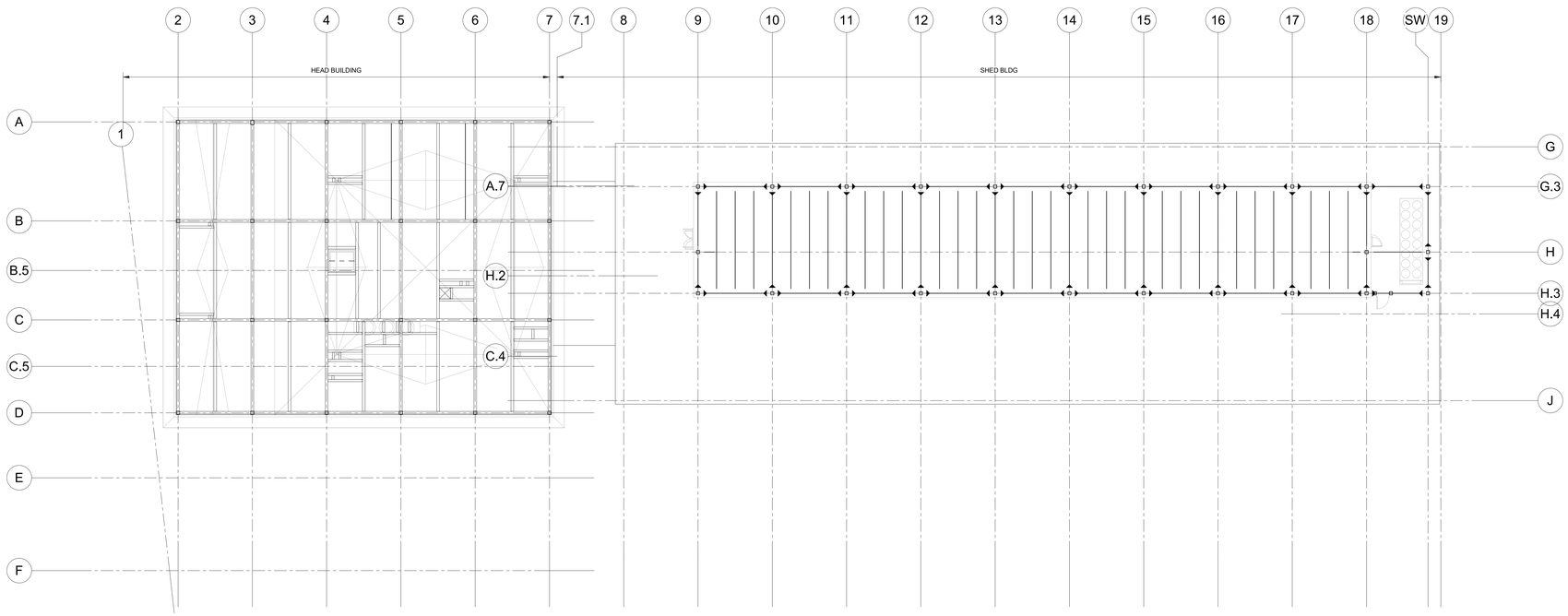
KEY PLAN:

PLAN NORTH

PROJECT:
SCIENCE & TECHNOLOGY BUILDING

DRAWING TITLE:
SHED BUILDING – LOW ROOF / PENTHOUSE FLOOR FRAMING PLAN

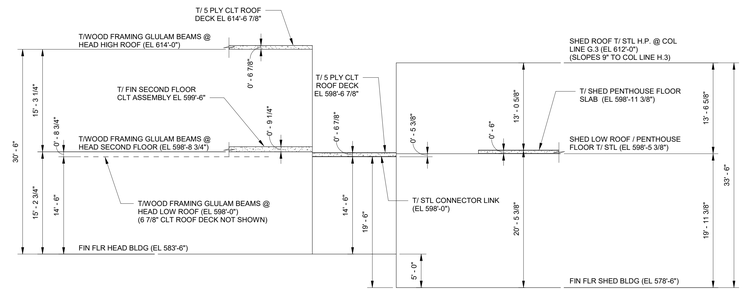
PROJECT NO: 23000	DATE: 9/23/25
PHASE: REBID & CONSTRUCTION	SCALE: 1/8" = 1'-0"

S-202



1 / S-300 HIGH ROOF FRAMING PLAN - OVERALL
1/16" = 1'-0"

NOTES:
SEE DWGS S-301 AND S-302 FOR PLAN NOTES FOR HEAD AND SHED BUILDINGS, RESPECTIVELY.



BUILDING ELEVATION DIAGRAM

ONEIDA COUNTY NEW YORK 1798

MVCC
MOHAWK VALLEY COMMUNITY COLLEGE

1101 SHERMAN DRIVE
UTICA, NY 13501
(315) 792-5400

ARCHITECT:

MARCH ASSOCIATES
ARCHITECTS & PLANNERS, PC

258 Genesee Street, Suite 300
Utica, New York 13501
315 733 3344

Mitchell Giurgola

Mitchell Giurgola Architects LLP
630 Ninth Avenue, Suite 711
New York, New York 10036
212 663 4000

STRUCTURAL ENGINEER:
Interactive Engineering Solutions, PC
1721 Black River Blvd, Suite L-1
Rome, NY 13440
315 339 7855

IE Solutions
Interactive Engineering Solutions, PC
Interactive Engineering Solutions P.C.
Certificate of Authorization No. 0022543
Expiration Date: 11/30/2027

MEP ENGINEER:
Towne Engineering
18 South Street
Utica, NY 13501
315 733 9000

SITE | CIVIL ENGINEER:
Appel Osborne Landscape Architecture
102 West Division Street, Suite 100
Syracuse, NY 13204
315 476 1022

SEAL:

STATE OF NEW YORK DOUGLAS R. CAHILL 61675 LICENSED PROFESSIONAL ENGINEER

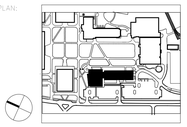
Douglas R. Cahill, PE
NYS Professional Engineer No. 61675
Expiration Date 3/31/2026

ISSUE/REVISION:

NO:	DATE	COMMENTS
1	9/23/25	REBID & CONSTRUCTION

COPYRIGHT © 2018 MITCHELL GIURGOLA ARCHITECTS LLP
ALL DIMENSIONS AND EXISTING CONDITIONS SHALL BE CHECKED AND VERIFIED BY THE CONTRACTOR BEFORE PROCEEDING WITH THE WORK.

KEY PLAN:



PROJECT:

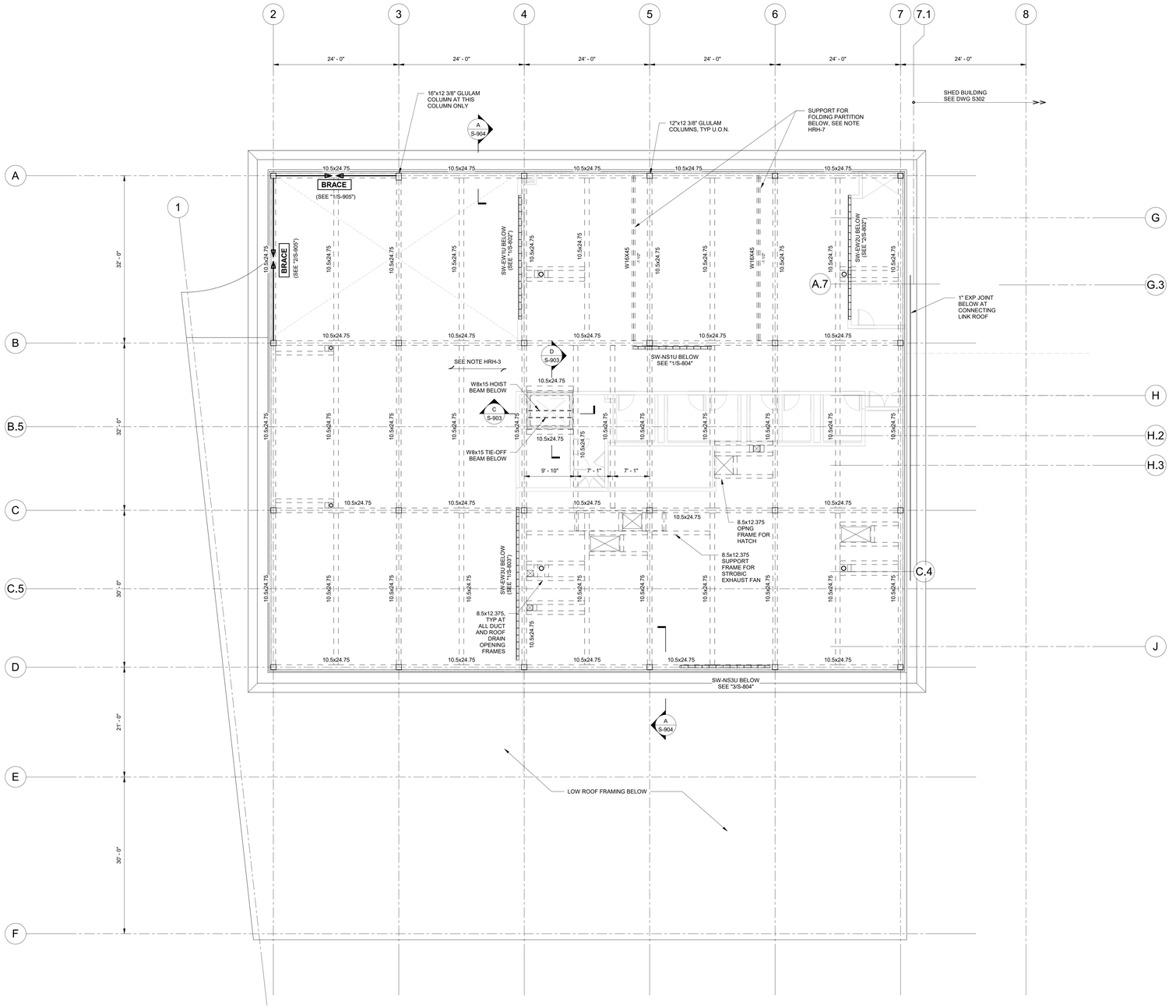
SCIENCE & TECHNOLOGY BUILDING

DRAWING TITLE:

HIGH ROOF FRAMING PLAN – OVERALL

PROJECT NO: 23000	DATE: 9/23/25
PHASE: REBID & CONSTRUCTION	SCALE: As indicated

S-300



GLULAM BEAM CONNECTION REACTIONS (UN-FACTORED)	
MEMBER DESCRIPTION	MAX END REACTION (UN-FACTORED GRAVITY LOADS) - KIPS
COL LINE A - 10.5x24.75	15 KIPS
COL LINE B - 10.5x24.75	20 KIPS
COL LINE C - 10.5x24.75	20 KIPS
COL LINE D - 10.5x24.75	15 KIPS
COL LINE 2 - 10.5x24.75	15 KIPS
COL LINE 3 THRU 6 - 10.5x24.75	20 KIPS
COL LINE 7 - 10.5x24.75	15 KIPS
FILLER BEAMS BETWEEN COL LINES 2 THRU 7 - 10.5x27.75	20 KIPS

NOTE: FOR MEMBERS NOT LISTED, THE MAXIMUM UN-FACTORED FDN REACTIONS ARE LESS THAN OR EQUAL TO 10 KIPS.

1 S-301 HIGH ROOF FRAMING PLAN - HEAD BLDG
1/8" = 1'-0"

HIGH ROOF FRAMING PLAN NOTES - HEAD BLDG:

HRH-1. LOCAL PROJECT REF DATUM FOR THE HEAD BUILDING FINISH FIRST FLOOR IS AT ELEV. 583'-6" (LOCAL EL 0'-0")
NOTE: THE LOCAL PROJECT REFERENCE DATUM EL 583'-6" FOR THE HEAD BUILDING FIRST FLOOR IS 5'-0" HIGHER THAN THE LOCAL PROJECT REF DATUM EL 578'-6" FOR THE SHED BUILDING FIRST FLOOR.

HRH-2. TOP OF HIGH ROOF WOOD FRAMING GLULAM BEAMS FOR THE HEAD BUILDING (UNDERSIDE OF DECK) IS EL 614'-0" (+30'-6" ABOVE HEAD BLDG LOCAL REFEERENCE DATUM EL 0'-0" IN NOTE HRH-1)

HRH-3. HIGH ROOF DECK: 5 PLY CLT ROOF PANEL (6 7/8" THICK), SEE TYPICAL DETAILS ON DWG S-902 AND ARCH DWGS. SEE PLAN FOR DIRECTION OF SPAN.

HRH-4. PROVIDE ROOF OPENING FRAMES FOR ALL OPENINGS GREATER THAN OR EQUAL TO 12" IN ANY DIRECTION. CONTRACTOR SHALL REVIEW ALL CONTRACT DRAWINGS FOR OPENINGS REQUIRED AND COORDINATE OPENING SIZES AND LOCATIONS WITH APPROVED EQUIPMENT OR ACCESSORIES SHOP DRAWINGS AND TRADE INVOLVED.

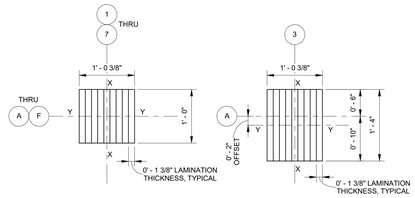
HRH-5. PROVIDE SUPPORT FRAMING FOR MECHANICAL EQUIPMENT. CONTRACTOR SHALL REVIEW ALL CONTRACT DRAWINGS FOR MECHANICAL EQUIPMENT REQUIRED AND COORDINATE ALL DIMENSIONAL REQUIREMENTS FOR SUPPORT FRAMING (INCLUDING SIZES AND LOCATIONS) WITH APPROVED EQUIPMENT OR ACCESSORIES SHOP DRAWINGS AND TRADE INVOLVED.

HRH-6. SEE DWG S-902 FOR ADDITIONAL TYPICAL FRAMING DETAILS AND DRAWING S-904 FOR DESIGN PARAMETERS AND GENERAL NOTES,

HRH-7. PROVIDE W16 SUPPORT BEAM FOR FOLDING PARTITION, COORD W/ FINAL SELECTED PARTITION AND PROVIDE HOLES FOR ATTACHMENT. BEAM SHALL BE INSTALLED 1 1/2" BELOW UNDERSIDE OF CLT ROOF PANELS. PROVIDE A 2x8 x 12" LONG SHIM AT CENTER SPAN OF BEAM ON TOP OF TOP BEAM FLANGE AND PROVIDE (4) 3/4" DIA THRU BOLTS AT BEAM GA, 6" APART THRU TOP BEAM FLANGE, SHIM AND CLT DECK.

HRH-8. REFER TO TABLE THIS SHEET FOR GLULAM BEAM MAXIMUM CONNECTION REACTIONS (UN-FACTORED GRAVITY LOADS)

HRH-9. HORIZONTAL PENETRATIONS THROUGH GLULAM BEAMS MAY BE REQUIRED FOR LATERAL DISTRIBUTION OF MECHANICAL AND ELECTRICAL SYSTEMS AND ARE NOT SHOWN ON THIS DRAWING. REFER TO ARCH DWG A-870 AND STRUCTURAL DWG S-902 FOR SPECIFIC INFORMATION REGARDING THESE PENETRATIONS. THE CONTRACTOR RESPONSIBLE FOR THE GLULAM BEAM SYSTEMS SHALL COORD ALL REQ'D PENETRATIONS (SIZE AND LOCATIONS) W/ TRADES INVOLVED.



2 S-301 WOOD COLUMN ORIENTATION PLAN - HEAD BLDG
1" = 1'-0"

NOTES:
1. ALL COLUMNS SHALL BE ORIENTED IN THE SAME DIRECTION AS SHOWN.
2. SEE DRAWING S-901 FOR WOOD COLUMN - STANDOFF SUPPORT POST ASSEMBLY DETAILS AT BASES OF ALL COLUMNS.

KEY:

- SHEAR WALLS BELOW TO SECOND FLOOR, SEE DWGS S-802 THRU S-804 FOR ADD'L INFO

BRACE - DIAGONAL STEEL ROD X-BRACING, SEE DWG S-905 FOR ADD'L INFO

ONEIDA COUNTY NEW YORK 1798

MVCC
MOHAWK VALLEY COMMUNITY COLLEGE
1101 SHERMAN DRIVE
UTICA, NY 13501
(315) 792-5400

ARCHITECT:
MARCH ASSOCIATES ARCHITECTS & PLANNERS, PC
258 Genesee Street, Suite 300
Utica, New York 13501
315 733 3344

Mitchell Giurgola
Mitchell Giurgola Architects LLP
630 Ninth Avenue, Suite 711
New York, New York 10036
212 663 4000

STRUCTURAL ENGINEER:
Interactive Engineering Solutions, PC
1721 Black River Blvd, Suite L-1
Rome, NY 13440
315 339 7855
IE Solutions
Interactive Engineering Solutions P.C.
Certificate of Authorization No. 0022543
Expiration Date: 11/30/2027

MEP ENGINEER:
Towne Engineering
18 South Street
Utica, NY 13501
315 733 9000

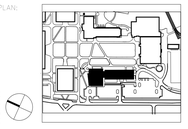
SITE | CIVIL ENGINEER:
Appel Osborne Landscape Architecture
102 West Division Street, Suite 100
Syracuse, NY 13204
315 476 1022

SEAL:
STATE OF NEW YORK DOUGLAS RICHARD CAHILL 061675 LICENSED PROFESSIONAL ENGINEER
Douglas R. Cahill, PE
NYS Professional Engineer No. 61675
Expiration Date 3/31/2026

ISSUE/REVISION:

NO.	DATE	COMMENTS
1	9/23/25	REBID & CONSTRUCTION

COPYRIGHT © 2018 MITCHELL GIURGOLA ARCHITECTS LLP
ALL DIMENSIONS AND EXISTING CONDITIONS SHALL BE CHECKED AND VERIFIED BY THE CONTRACTOR BEFORE PROCEEDING WITH THE WORK.

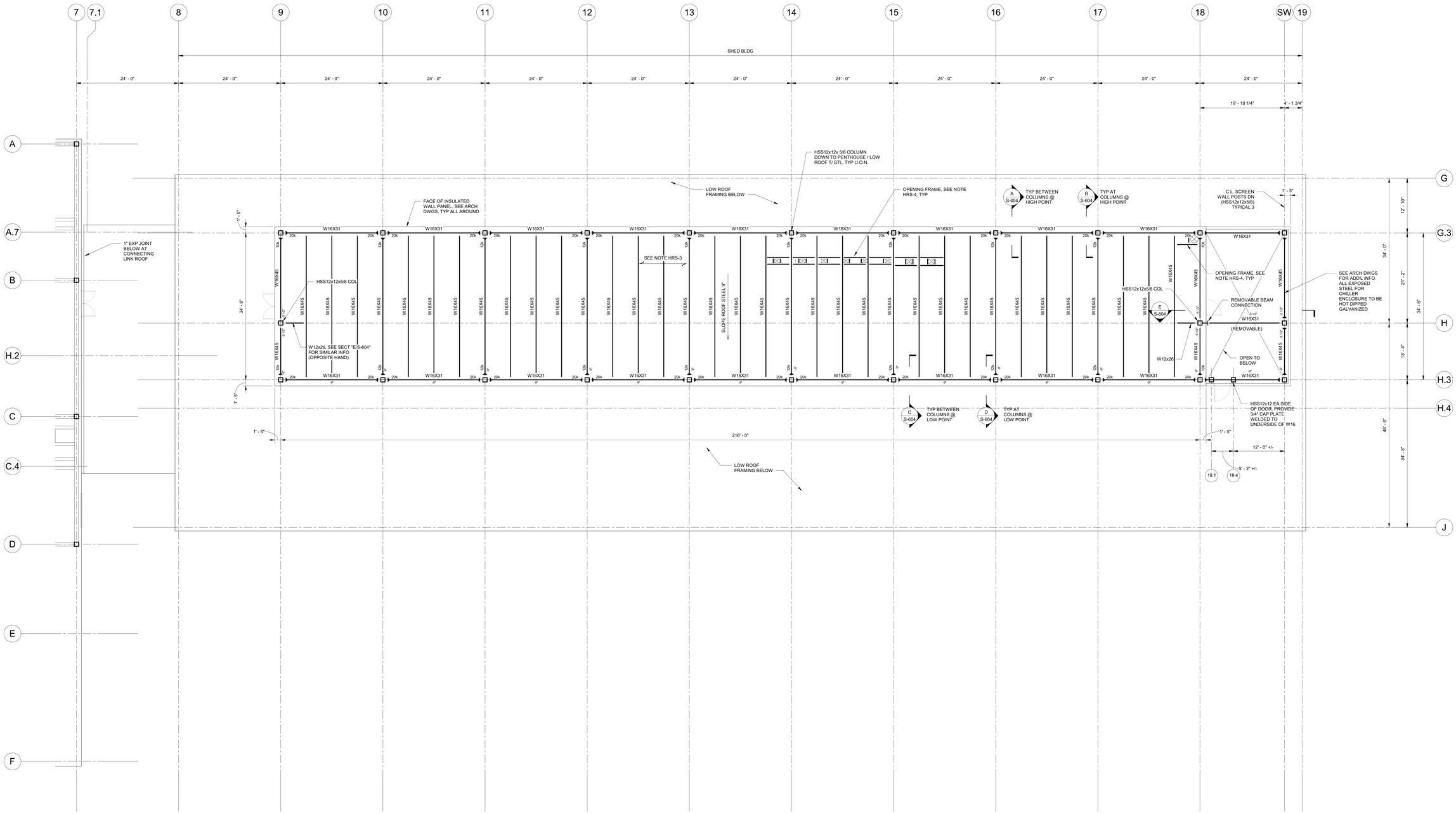
KEY PLAN:


PROJECT:
SCIENCE & TECHNOLOGY BUILDING

DRAWING TITLE:
HEAD BUILDING – HIGH ROOF FRAMING PLAN

PROJECT NO: 23000 | DATE: 9/23/25
PHASE: REBID & CONSTRUCTION | SCALE: As indicated

S-301



1 / S-302 HIGH ROOF FRAMING PLAN - SHED BLDG
1/8" = 1'-0"

HIGH ROOF FRAMING PLAN NOTES - SHED BLDG:

HRS-1. LOCAL PROJECT REF DATUM FOR THE SHED BUILDING FINISH FIRST FLOOR IS AT ELEV. 578'-6" (LOCAL EL 0'-0")
NOTE: THE LOCAL PROJECT REFERENCE DATUM EL 578'-6" FOR THE SHED BUILDING FIRST FLOOR IS 5'-0" LOWER THAN THE LOCAL PROJECT REF DATUM EL 583'-6" FOR THE HEAD BUILDING FIRST FLOOR.

HRS-2. TOP OF HIGH ROOF STEEL FOR THE SHED BUILDING (UNDERSIDE OF DECK ALONG COL LINE G.3) IS AT EL 612'-0" (+33'-6" ABOVE SHED BLDG LOCAL REFERENCE DATUM EL 0'-0" IN NOTE HRS-1 UNLESS OTHERWISE NOTED + OR - AND MEASURED FROM EL 612'-0").

HRS-3. ROOF DECK: 1 1/2" GALV 20 GA TYPE B METAL ROOF DECK (NOT PAINTED). SEE PLAN FOR DIRECTION OF SPAN AND TYPICAL ATTACHMENT DETAIL ON DWG S-601. CONTRACTOR SHALL COORD EDGE OF DECK (E.O.D.) AND LOCATIONS OF WOOD BLOCKING SUPPORT STEEL W/ ARCH DETAILS.

HRS-4. PROVIDE ROOF OPENING FRAMES PER TYPICAL DETAILS ON DWG S-601 FOR ALL OPENINGS GREATER THAN OR EQUAL TO 12" IN ANY DIRECTION. CONTRACTOR SHALL REVIEW ALL CONTRACT DRAWINGS FOR OPENINGS REQUIRED AND COORDINATE OPENING SIZES AND LOCATIONS WITH APPROVED EQUIPMENT OR ACCESSORIES SHOP DRAWINGS AND TRADE INVOLVED.

HRS-5. PROVIDE SUPPORT FRAMING FOR MECHANICAL EQUIPMENT PER TYPICAL DETAILS ON DWG S-601. CONTRACTOR SHALL REVIEW ALL CONTRACT DRAWINGS FOR MECHANICAL EQUIPMENT REQUIRED AND COORDINATE ALL DIMENSIONAL REQUIREMENTS FOR SUPPORT FRAMING (INCLUDING SIZES AND LOCATIONS) WITH APPROVED EQUIPMENT OR ACCESSORIES SHOP DRAWINGS AND TRADE INVOLVED.

HRS-6. SEE DWG S-601 FOR ADDITIONAL FRAMING DETAILS, DESIGN PARAMETERS AND GENERAL NOTES.

KEY:

- DESIGNATES MOMENT FRAME CONNECTION SEE TYPICAL DETAILS ON DWG S-602

X k - DESIGNATES MEMBER UN-FACTORED END REACTIONS (GRAVITY LOADS).

FOR MEMBERS NOT LABELED, UN-FACTORED END REACTION LESS THAN OR EQUAL TO 10 KIPS

ONEIDA COUNTY NEW YORK 1798

MVCC
MOHAWK VALLEY COMMUNITY COLLEGE
1101 SHERMAN DRIVE
UTICA, NY 13501
(315) 792-5400

ARCHITECT:
MARCH ASSOCIATES ARCHITECTS & PLANNERS, PC
258 Genesee Street, Suite 300
Utica, New York 13501
315 733 3344

Mitchell Giurgola
Mitchell Giurgola Architects LLP
630 Ninth Avenue, Suite 711
New York, New York 10036
212 663 4000

STRUCTURAL ENGINEER:
Interactive Engineering Solutions, PC
1721 Black River Blvd, Suite L-1
Rome, NY 13440
315 339 7855
IE Solutions
Interactive Engineering Solutions P.C.
Certificate of Authorization No. 0023543
Expiration Date: 11/30/2027

MEP ENGINEER:
Towne Engineering
18 South Street
Utica, NY 13501
315 733 9000

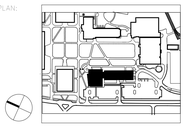
SITE | CIVIL ENGINEER:
Appel Osborne Landscape Architecture
102 West Division Street, Suite 100
Syracuse, NY 13204
315 476 1022

SEAL:
STATE OF NEW YORK DOUGLAS R. CAHILL 61675 LICENSED PROFESSIONAL ENGINEER
Douglas R. Cahill, PE
NYS Professional Engineer No. 61675
Expiration Date 3/31/2026

ISSUE/REVISION:

NO:	DATE	COMMENTS
1	9/23/25	REBID & CONSTRUCTION

COPYRIGHT © 2018 MITCHELL GIURGOLA ARCHITECTS LLP
ALL DIMENSIONS AND EXISTING CONDITIONS SHALL BE CHECKED AND VERIFIED BY THE CONTRACTOR BEFORE PROCEEDING WITH THE WORK.

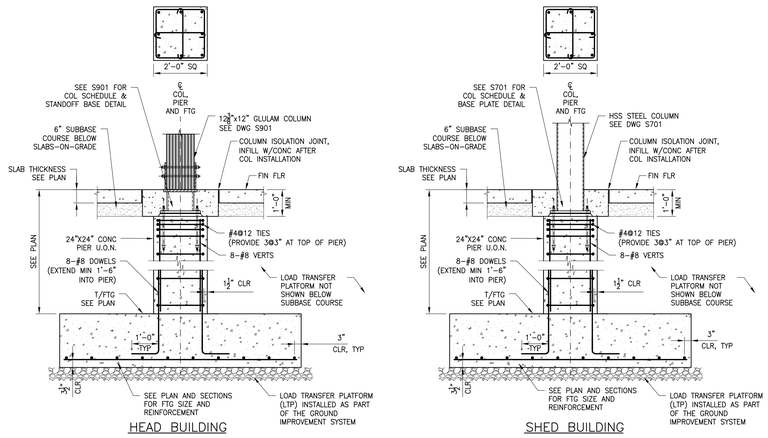
KEY PLAN:


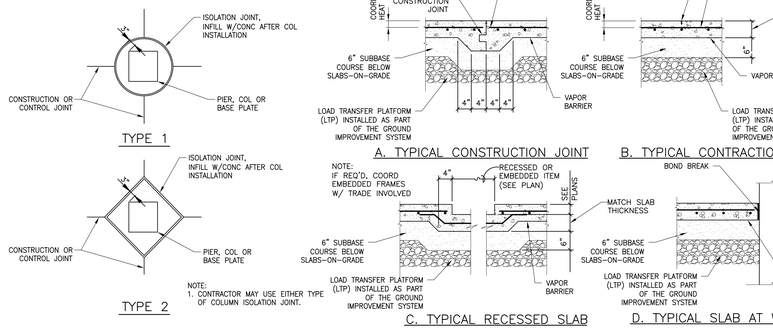
PROJECT:
SCIENCE & TECHNOLOGY BUILDING

DRAWING TITLE:
SHED BUILDING – HIGH ROOF FRAMING PLAN

PROJECT NO: 23000	DATE: 9/23/25
PHASE: REBID & CONSTRUCTION	SCALE: 1/8" = 1'-0"

S-302





NOTES:
1. ALL CONCRETE FOR SLAB ON GRADE SHALL BE F'c PER SPECIFICATION SECTION 03300 CAST-IN-PLACE CONCRETE.
2. REBAR TO BE RECESSED OR LAPPED AT ALL RECESSES.
3. REBAR SHALL BE SUPPORTED AND LAPPED PER THE SPECIFICATIONS.

BUILDING PAD SITE PREPARATION / GROUND IMPROVEMENTS, FOUNDATION DESIGN PARAMETERS AND GENERAL NOTES:

F-1. THE BUILDING PAD SITE PREPARATION WITH GROUND IMPROVEMENTS, THE FOUNDATION SYSTEM AND DESIGN PARAMETERS, AND THE GENERAL NOTES PRESENTED ON THE DRAWINGS AND WITHIN THE PROJECT SPECIFICATIONS ARE BASED ON INFORMATION CONTAINED WITHIN THE , REFERENCED GEOTECHNICAL INFORMATION, AND REPORTS , PREPARED BY CME ASSOCIATES, INC. IDENTIFIED ON DRAWING S-100, IN SPECIFICATION SECTION 312000 - , BUILDING EARTH MOVING , , AND GENERALLY ACCEPTED GOOD ENGINEERING PRACTICES.

F-2. THE RESULTS OF THE SUBSURFACE CONDITIONS IDENTIFIED IN CME'S SUBSURFACE EXPLORATIONS AND TEST PITS AT THE PROJECT SITE INDICATE THE SITE CONTAINS UNSUITABLE / UNRELIABLE BEARING MATERIALS (EXISTING UNCONTROLLED FILL) RANGING FROM ABOUT 3-FEET TO 13-FEET BELOW EXISTING GRADES, UNDERLAIN BY A BURIED ORGANIC LAYER (TO APPROXIMATELY 8 TO 11 FEET BELOW EXISTING GRADE IN AREAS). THE EXISTING FILL MATERIAL DOES NOT APPEAR TO HAVE BEEN PLACED IN A PREPARED MANNER AND MEETS THE BUILDING CODE DEFINITION OF , UNPREPARED FILL , . UNPREPARED FILL IS ASSIGNED A ZERO-BEARING CAPACITY BY THE BUILDING CODE AND IS DEEMED , UNSUITABLE SOILS , . THE BURIED ORGANIC LAYER IS ALSO NOT RELIABLE BEARING MATERIAL TO SUPPORT BUILDING FOUNDATIONS AND SLABS-ON-GRADES. REFER TO THE ABOVE NOTED REPORTS CONTAINED IN THE PROJECT MANUAL FOR ADDITIONAL INFORMATION.

BASED ON THE INFORMATION PROVIDED AND DISCUSSED, THE EXISTING SUBSURFACE CONDITIONS IDENTIFIED ARE NOT FAVORABLE TO SUPPORT THE PROPOSED STRUCTURES UTILIZING A , CONVENTIONAL , SHALLOW FOUNDATIONS AND SLABS-ON-GRADE SYSTEMS WITHOUT INCORPORATING A , GROUND IMPROVEMENT , SYSTEM.

F-3. TO ALLOW THE INSTALLATION OF THE , CONVENTIONAL , SHALLOW FOUNDATIONS AND SLAB-ON-GRADE SYSTEM AS DESIGNED AND AS SHOWN ON THE CONTRACT DOCUMENTS FOR THE PROPOSED BUILDINGS, THE SPECIFIED GROUND IMPROVEMENT SYSTEM IS REQUIRED TO BE PERFORMED UNDER THE ENTIRE FOOTPRINT OF BOTH THE HEAD BUILDING AND THE SHED BUILDING.

F-4. THE CONTRACTOR SHALL PAY SPECIAL ATTENTION TO THE BUILDING PAD SITE PREPARATION / GROUND IMPROVEMENT REQUIREMENTS IDENTIFIED ON THE DRAWINGS AND IN THE PROJECT SPECIFICATIONS.

REFER TO DRAWINGS S-100 FOR BUILDING PAD SITE PREPARATION / GROUND IMPROVEMENTS GENERAL NOTES FOR ADDITIONAL INFORMATION.

F-5. THE CONTRACTOR SHALL FOLLOW ALL EXCAVATION SAFETY PRACTICES AS MANDATED BY 29 CFR PART 1926 (OSHA) AND ALL APPLICABLE STATE AND LOCAL REGULATIONS. CONSTRUCTION SITE SAFETY IS THE SOLE RESPONSIBILITY OF THE CONTRACTOR, WHO SHALL BE SOLELY RESPONSIBLE FOR THE MEANS, METHODS AND SEQUENCE OF ALL CONSTRUCTION ACTIVITIES.

F-6. THE CONTRACTOR SHALL ASSUME THE ON-SITE EXCAVATED SOIL SHALL NOT BE RE-USED WITHIN STRUCTURAL AREAS OF THE SITE OR STRUCTURES.

~~HOWEVER, THE CONTRACTOR HAS THE OPTION TO STOCKPILE THE EXCAVATED EXISTING ON-SITE MATERIAL AS DIRECTED BY THE OWNER'S ON-SITE REPRESENTATIVE FOR CONSIDERATION AND TESTING FOR RE-USE AS ON-SITE FILL MATERIALS. APPROVAL FOR RE-USE SHALL BE BY THE SPECIAL INSPECTOR'S PROFESSIONAL GEOTECHNICAL ENGINEER (IPGE) WHO WILL VERIFY CONFORMANCE AND IF THE MATERIAL IS SUITABLE FOR RE-USE.~~

ALL IMPORTED BORROW MATERIALS ~~AND SATISFACTORY EXCAVATED SOIL MATERIALS~~ SHALL BE STOCKPILED WITHOUT INTERMIXING. PLACE, GRADE AND SHAPE STOCKPILES TO DRAIN SURFACE WATER. COVER TO PREVENT WINDBLOWN DUST. STOCKPILE SOIL MATERIALS AWAY FROM EDGE OF EXCAVATIONS. DO NOT STORE WITHIN DRIP LINES OF REMAINING TREES.

IF THE EXCAVATED EXISTING SOIL MATERIALS ARE DEEMED TO BE UNSUITABLE, THE CONTRACTOR SHALL REMOVE THE UNSUITABLE MATERIALS FROM THE SITE AND LEGALLY DISPOSE OF THEM AT NO ADDITIONAL COST TO THE OWNER OR PROJECT.

REFER TO SPECIFICATION SECTION 31 20 00 "BUILDING EARTH MOVING" FOR ADDITIONAL INFORMATION.

F-7. PLEASE BE ADVISED THAT INFORMATION FOR ANY EXISTING UTILITIES IN THE AREA OF NEW CONSTRUCTION IS NOT SHOWN ON THE FOUNDATION PLANS. THE CONTRACTOR SHALL COORDINATE WITH THE SITE DRAWINGS TO THE GREATEST EXTENT POSSIBLE REGARDING KNOWN UTILITIES AND SHALL ALSO USE EXTREME CARE DURING EXCAVATION FOR ALL NEW WORK SO AS NOT TO DAMAGE OR INTERRUPT EXISTING UNDERGROUND UTILITIES'.

F-8. LEVELS OF BACKFILL AGAINST FOUNDATION WALLS SHALL NOT DIFFER BY MORE THAN 2'-0" ON EITHER SIDE OF WALLS, UNLESS WALLS ARE ADEQUATELY BRACED OR GRADE LEVEL SLABS ARE IN PLACE.

F-9. STEP FOOTINGS WHERE ELEVATIONS CHANGE AT ONE VERTICAL ON TWO HORIZONTAL. PLACE LOW FOOTINGS FIRST.

F-10. CONCRETE GENERAL NOTES APPLY TO FOUNDATIONS.

F-11. WALL OPENINGS: 2- #6 FOUR SIDES, EXTEND 2'-0" BEYOND OPENINGS UNLESS OTHERWISE NOTED (U.O.N.).

F-12. WALL CONSTRUCTION JOINTS: PROVIDE PER TYPICAL DETAIL.

F-13. WALL, PIER AND STEPPED FOOTINGS: PROJECT 6", 16" THICK, U.O.N.

CONCRETE

C-1. CONCRETE PARAMETERS: REFER TO SPECIFICATIONS FOR ADD'L INFO.
- a) BUILDING FOOTING CONCRETE STRENGTH: 4000 PSI AT 28 DAYS. WEIGHT: 145 PCF
- b) BUILDING FOUNDATION WALL CONCRETE STRENGTH: 4500 PSI AT 28 DAYS. WEIGHT: 145 PCF
- c) INTERIOR SLABS-ON-GRADE CONCRETE STRENGTH: 4000 PSI AT 28 DAYS. WEIGHT: 145 PCF
- d) EXTERIOR APRON SLABS-ON-GRADE AND FROST WALLS AT OVERHEAD DOORS AND MAN-DOOR OPENINGS: 4500 PSI AT 28 DAYS. WEIGHT: 145 PCF

C-2. ROD REINFORCEMENT: ASTM A615, GRADE 60. ASTM A615-81 SUPPLEMENTARY REQUIREMENT S1 SHALL APPLY.

C-3. WELDED WIRE FABRIC REINFORCEMENT: ASTM A185 AND A82.

C-4. DETAILS, WORKMANSHIP AND GENERAL PROCEDURE: ACI 318, ACI 315, ACI 301

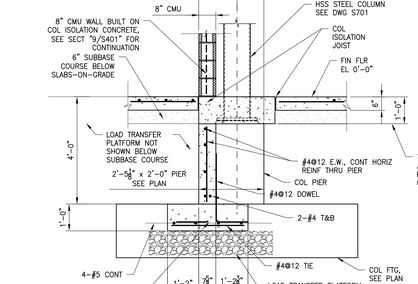
C-5. THE MIN. LENGTH OF LAPS FOR SPLICES AND EMBEDMENT LENGTHS SHALL BE IN ACCORDANCE WITH ACI REQUIREMENTS, LATEST EDITION.

TESTING AGENCY SERVICES DURING CONSTRUCTION

TS-1. ALL EARTHWORK OPERATIONS, SUBGRADE COMPACTION, FOOTING EXCAVATIONS AND FOUNDATION CONSTRUCTION SHALL BE ROUTINELY MONITORED, INSPECTED AND TESTED IN ACCORDANCE WITH THE SPECIFICATIONS BY A QUALIFIED, PRE-APPROVED TESTING AGENCY AND THE SPECIAL INSPECTING PROFESSIONAL GEOTECHNICAL ENGINEER (IPGE). TO INSURE ALL EXISTING CONDITIONS AND CONSTRUCTION ACTIVITIES COMPLY WITH DESIGN ASSUMPTIONS, RECOMMENDATIONS AND PRESUMPTIVE BEARING PRESSURES OUTLINED IN SPECIFICATION SECTION 312000 "BUILDING EARTH MOVING".

TS-2. IT IS REQUIRED THAT THE OWNER CONTRACT WITH AN APPROVED TESTING AGENCY DURING CONSTRUCTION TO VERIFY ALL DESIGN ASSUMPTIONS USED TO DESIGN AND PREPARE THE CONTRACT DOCUMENTS. USE OF THESE SERVICES TYPICALLY ALLOWS THE OWNER TO TAKE ADVANTAGE OF CONDITIONS THAT MAY BE MORE FAVORABLE THAN THOSE ANTICIPATED. CONVERSELY, CONDITIONS LESS FAVORABLE THAN THOSE ANTICIPATED ARE IDENTIFIED IN A MORE TIMELY FASHION ALLOWING FOR APPROPRIATE CORRECTIVE ACTION BEFORE PROCEEDING WITH CONSTRUCTION. REFER TO THE PROJECT MANUAL DIVISION 1, SPECIFICATION SECTION 014533 "CODE REQUIRED SPECIAL INSPECTIONS AND PROCEDURES" FOR ADDITIONAL INFORMATION.

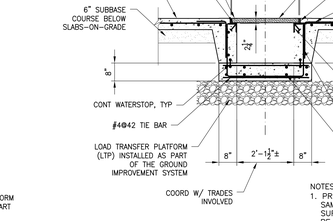
1 ISOLATED PIER AND FOOTING
S-401 NO SCALE

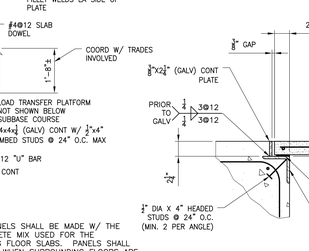


NOTES:
1. NO WALL CONTROL JOINT IS ALLOWED WITHIN 6 FEET OF CORNERS OR INTERSECTING WALLS. PROVIDE WALL CONSTRUCTION JOINT IN THESE AREAS IF JOINT IS REQUIRED.
2. PROVIDE WALL CONTROL JOINTS @ 25'-0 O.C. MAX. PROVIDE TYPE I WHEN LOCATION OF CONTROL JOINT COINCIDES WITH CONSTRUCTION JOINT LOCATION. PROVIDE TYPE II WHEN LENGTH OF WALL POUR EXCEEDS 25'-0.

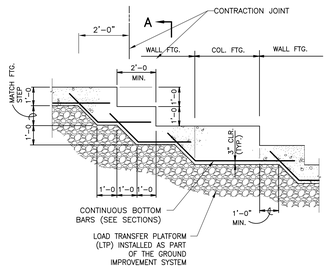
2 ISOLATED COLUMN JOINT
S-401 NO SCALE

3 TYPICAL SLAB ON GRADE
S-401 NO SCALE

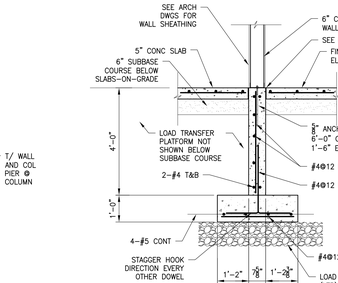




4 TYPICAL WALL CORNER REINFORCEMENT
S-401 NO SCALE



5 OPENING REINFORCEMENT
S-401 NO SCALE



NOTE:
DETAIL APPLIES TO OPENINGS GREATER THAN 12" IN ANY DIRECTION

6 TYPICAL WALL CONTROL JOINT
S-401 NO SCALE

7 DISCONTINUOUS CONTRACTION JOINT
S-401 NO SCALE

8 TYPICAL STEPPED WALL FOOTING
S-401 NO SCALE

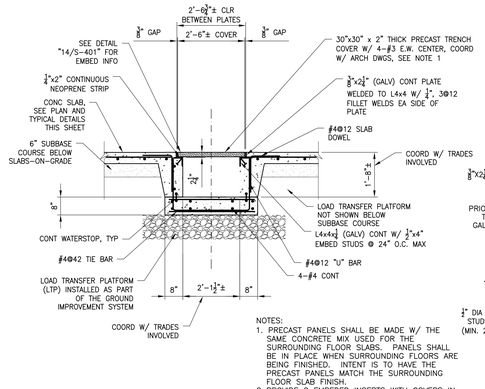
SHED BUILDING
ALONG COL LINE "H", SEE PLAN FOR LOCATIONS (MARKED WITH A STAR)

11 SECTION
S-401 1/2"=1'-0"

HEAD BUILDING
TYPICAL SHEAR WALL FOUNDATION

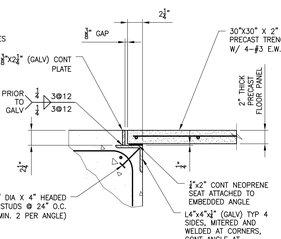
12 SECTION
S-401 1/2"=1'-0"

NOTES:
1. SEE PLAN AND 800 SERIES DRAWINGS FOR ADDITION INFO

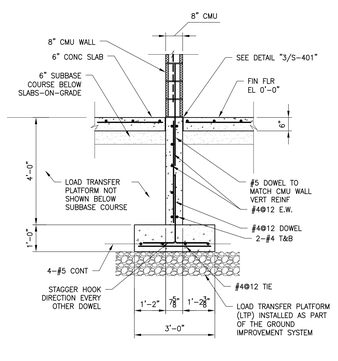


NOTES:
1. PRECAST PANELS SHALL BE MADE W/ THE SAME CONCRETE MIX USED FOR THE SURROUNDING FLOOR SLABS. PANELS SHALL BE IN PLACE WHEN SURROUNDING FLOORS ARE BEING FINISHED. INTENT IS TO HAVE THE PRECAST PANELS MATCH THE SURROUNDING FLOOR SLAB FINISH.
2. PROVIDE 2 EMBEDDED INSERTS WITH COVERS IN EA PANEL TO ALLOW FOR REMOVING PANELS.

13 UTILITY TRENCH AT CHEMISTRY ROOMS
S-401 1/2"=1'-0"

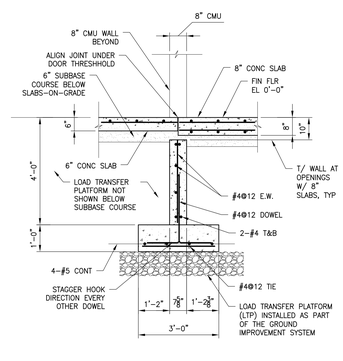


14 PRECAST PANEL DETAIL
S-401 1 1/2"=1'-0"



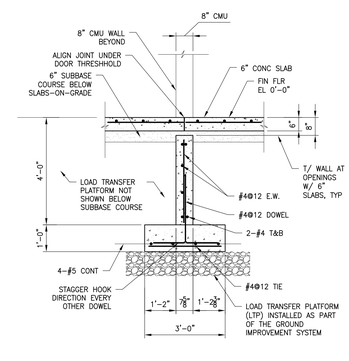
SHED BUILDING
TYPICAL INTERIOR BETWEEN OPNG'S

9 SECTION
S-401 1/2"=1'-0"



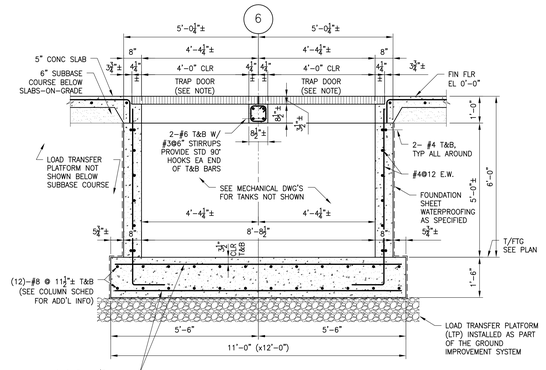
SHED BUILDING
TYPICAL INTERIOR AT OPNG'S

10A SECTION
S-401 1/2"=1'-0"



SHED BUILDING
TYPICAL INTERIOR AT OPNG'S

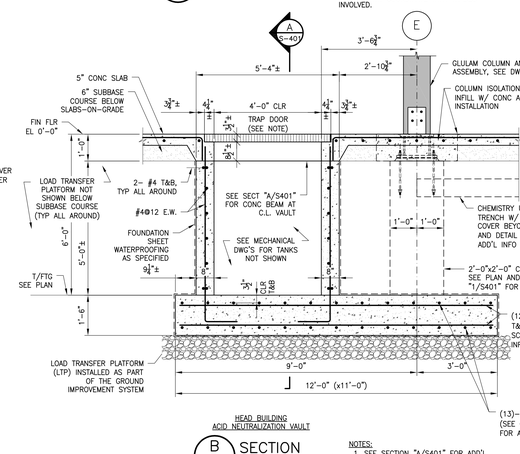
10B SECTION
S-401 1/2"=1'-0"



HEAD BUILDING
ACID NEUTRALIZATION VAULT

A SECTION
S-401 1/2"=1'-0"

NOTES:
1. (2) 48"x48" CLEAR TRAP DOORS FOR ACCESS (TYPE J TRAP DOORS BY ORION OR APPROVED EQUAL), SUPPLIED BY PLUMBING CONTRACTOR AND INSTALLED BY G.C.
2. SLEEVES FOR PIPING THRU FOUNDATION WALLS NOT SHOWN. COORDINATE WITH TRADES INVOLVED.



HEAD BUILDING
ACID NEUTRALIZATION VAULT

B SECTION
S-401 1/2"=1'-0"

NOTES:
1. SEE SECTION "A/S401" FOR ADD'L INFORMATION.

ONEIDA COUNTY 1798 NEW YORK
MVCC MOHAWK VALLEY COMMUNITY COLLEGE
1101 SHERMAN DRIVE
UTICA, NY 13501
(315) 792-5400

ARCHITECT:
MARCH ASSOCIATES ARCHITECTS & PLANNERS, PC
258 Genesee Street, Suite 300
Utica, New York 13501
315 733 3344

Mitchell Giurgola
Mitchell Giurgola Architects LLP
630 Ninth Avenue, Suite 711
New York, New York 10036
212 663 4000

STRUCTURAL ENGINEER:
Interactive Engineering Solutions, PC
1721 Black River Blvd, Suite L-1
Rome, NY 13440
315 339 7855
IE Solutions
Interactive Engineering Solutions P.C.
Certificate of Authorization No. 0022543
Expiration Date: 11/30/2027

MEP ENGINEER:
Towne Engineering
18 South Street
Utica, NY 13501
315 733 9000

SITE | CIVIL ENGINEER:
Appel Osborne Landscape Architecture
102 West Division Street, Suite 100
Syracuse, NY 13204
315 476 1022

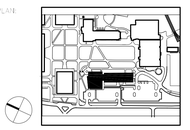
SEAL:
STATE OF NEW YORK 081113 PROFESSIONAL ENGINEER
Douglas R. Cahill, PE
NYS Professional Engineer No. 61675
Expiration Date 3/31/2026

ISSUE/REVISION:

NO	DATE	COMMENTS
1	9/23/25	REBID & CONSTRUCTION

COPYRIGHT © 2016 MITCHELL GIURGOLA ARCHITECTS LLP
THESE DRAWINGS ARE THE PROPERTY OF THE ARCHITECT AND ARE NOT TO BE USED IN WHOLE OR IN PART BY THE CONTRACTOR BEFORE PROCEEDING WITH THE WORK.

KEY PLAN:



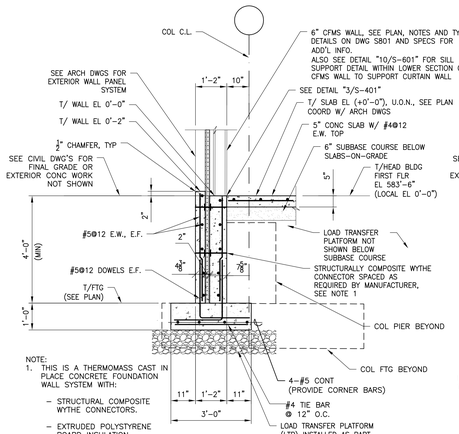
PLAN NORTH

PROJECT:
SCIENCE & TECHNOLOGY BUILDING

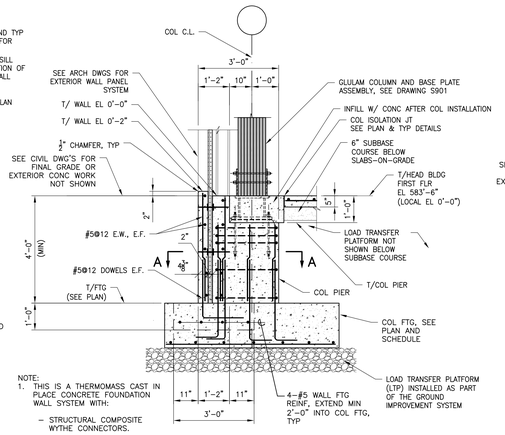
DRAWING TITLE:
HEAD AND SHED BUILDINGS – TYPICAL FOUNDATION DETAILS AND NOTES

PROJECT NO: 23000	DATE: 9/23/2025
PHASE: REBID & CONSTRUCTION	SCALE: AS NOTED

S-401

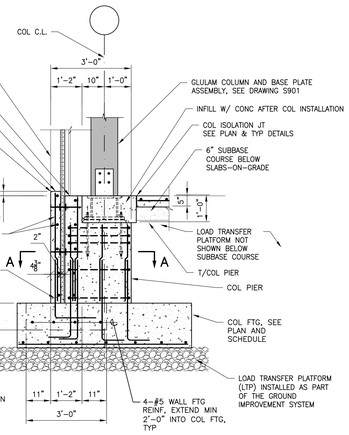


A SECTION S-402 1/2"=1'-0"



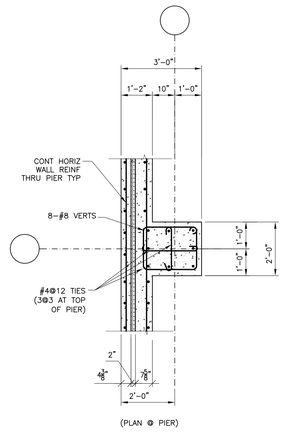
B SECTION S-402 1/2"=1'-0"

NOTE: SEE SECT "A/S-402" FOR ADD'L INFO NOT SHOWN

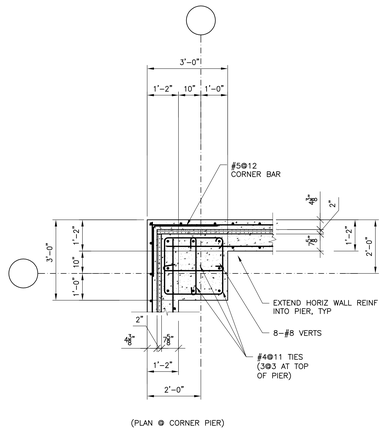


C SECTION S-402 1/2"=1'-0"

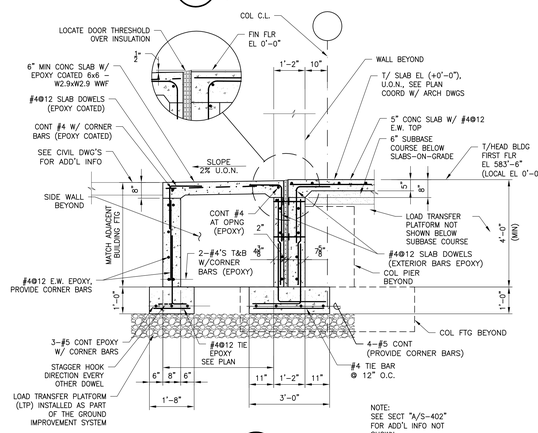
NOTE: SEE SECT "A/S-402" FOR ADD'L INFO NOT SHOWN



SECTION A–A



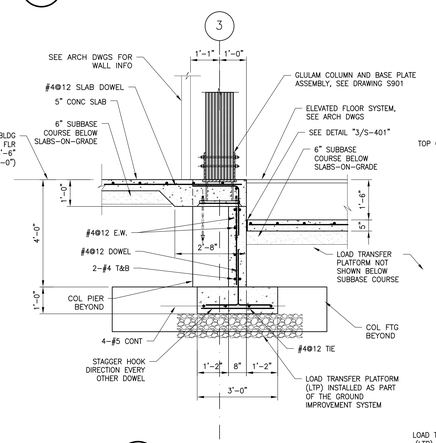
SECTION A–A



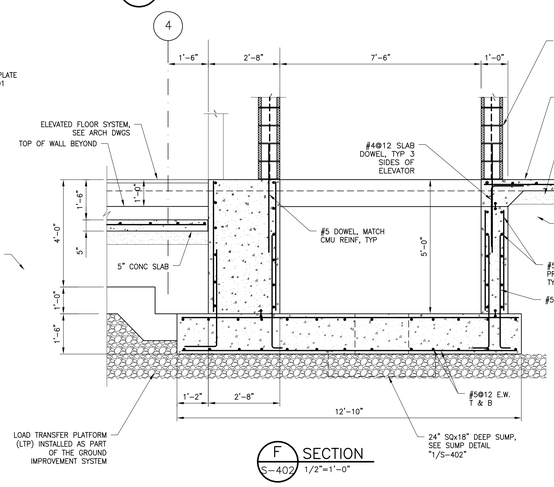
D SECTION S-402 1/2"=1'-0"

NOTE: PROVIDE INTERSECTION BARS AT SIDE WALLS THAT ABUT MAIN FOUNDATION WALLS, TYP.

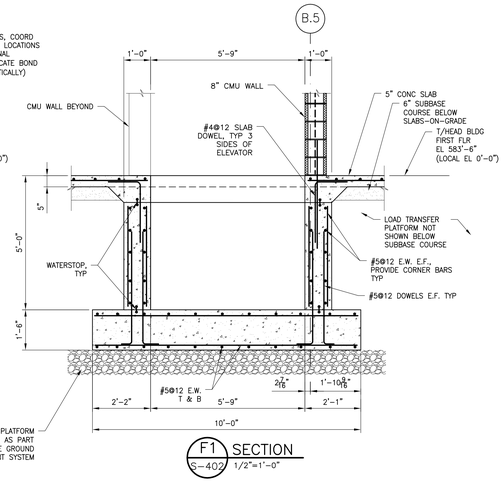
NOTE: SEE SECT "A/S-402" FOR ADD'L INFO NOT SHOWN



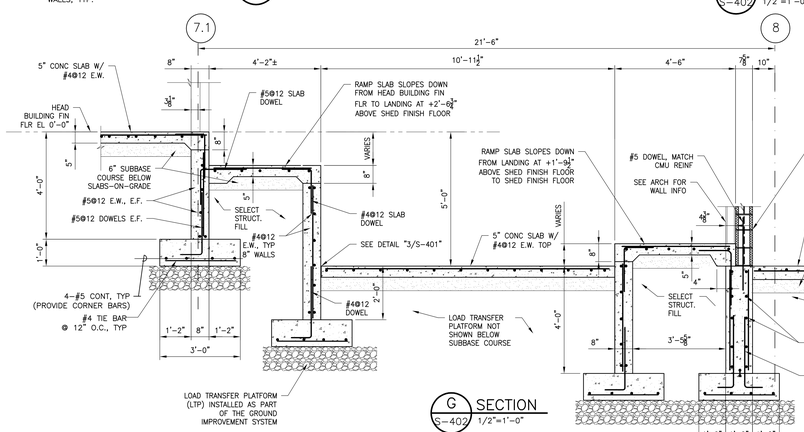
E SECTION S-402 1/2"=1'-0"



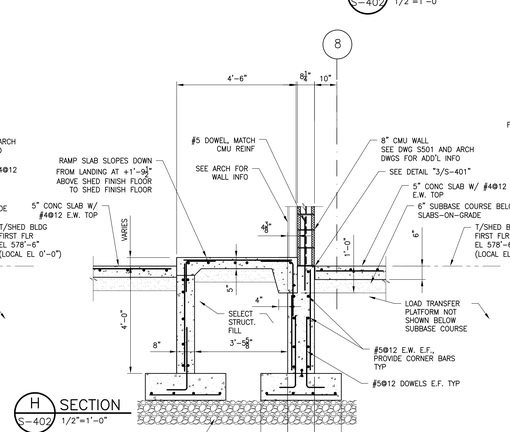
F SECTION S-402 1/2"=1'-0"



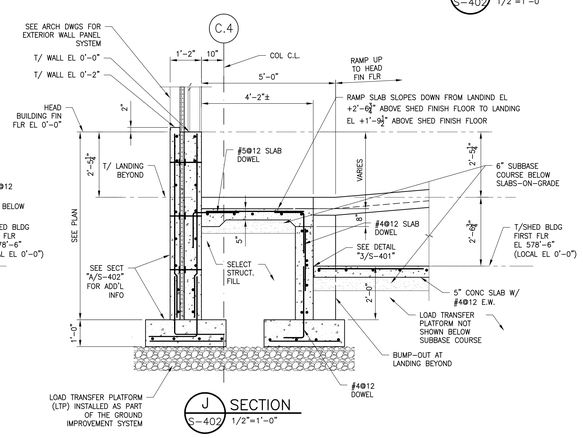
F1 SECTION S-402 1/2"=1'-0"



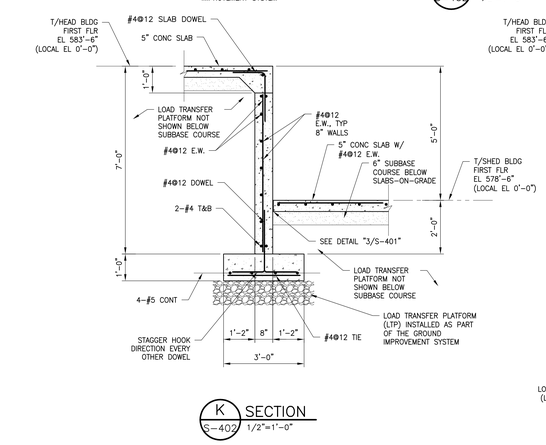
G SECTION S-402 1/2"=1'-0"



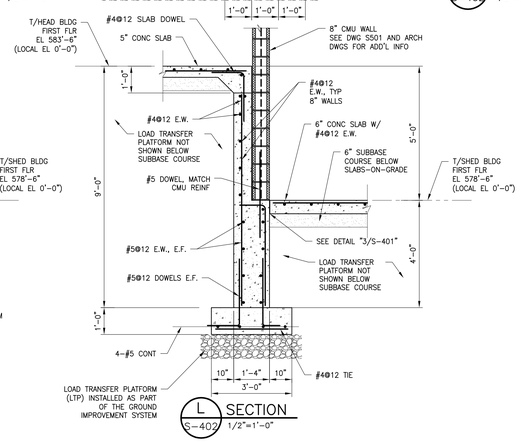
H SECTION S-402 1/2"=1'-0"



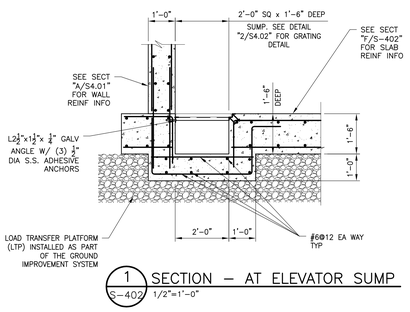
J SECTION S-402 1/2"=1'-0"



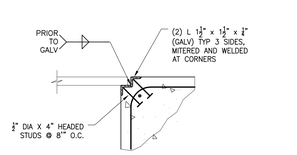
K SECTION S-402 1/2"=1'-0"



L SECTION S-402 1/2"=1'-0"



1 SECTION – AT ELEVATOR SUMP S-402 1/2"=1'-0"



NOTE:
STEEL GRATING TO BE WELDED RECTANGULAR DESIGN, WITH 1 1/2"x3/8" MAIN BEARING BARS @ 1 3/16" CENTER TO CENTER WITH CROSS BARS TO BE RESISTANCE WELDED AT RIGHT ANGLES TO THE MAIN BEARING BARS SPACED @ 4" CENTER TO CENTER. FINISH TO BE GALVANIZED.

2 ELEVATOR SUMP GRATING DETAIL S-402 1 1/2"=1'-0"

ONEIDA COUNTY NEW YORK 1798

MVCC
MOHAWK VALLEY COMMUNITY COLLEGE
1101 SHERMAN DRIVE
UTICA, NY 13501
(315) 792-5400

ARCHITECT:
MA MARCH ASSOCIATES ARCHITECTS & PLANNERS, PC
258 Genesee Street, Suite 300
Utica, New York 13501
315 733 3344

Mitchell Giurgola
Mitchell Giurgola Architects LLP
630 Ninth Avenue, Suite 711
New York, New York 10036
212 663 4000

STRUCTURAL ENGINEER:
Interactive Engineering Solutions, PC
1721 Black River Blvd, Suite L-1
Rome, NY 13440
315 339 7855
IE Solutions
Interactive Engineering Solutions P.C.
Certificate of Authorization No. 0922543
Expiration Date: 11/30/2027

MEP ENGINEER:
Towne Engineering
18 South Street
Utica, NY 13501
315 733 9000

SITE | CIVIL ENGINEER:
Appel Osborne Landscape Architecture
102 West Division Street, Suite 100
Syracuse, NY 13204
315 476 1022

SEAL:
STATE OF NEW YORK
DOUGLAS R. CAHILL
061675
LICENSED PROFESSIONAL ENGINEER
Douglas R. Cahill, PE
NYS Professional Engineer No. 61675
Expiration Date 3/31/2026

ISSUE/REVISION:

NO.	DATE	COMMENTS
1	9/23/25	REBID & CONSTRUCTION

COPYRIGHT © 2018 MITCHELL GIURGOLA ARCHITECTS LLP
ALL DIMENSIONS AND EXISTING CONDITIONS SHALL BE CHECKED AND VERIFIED BY THE CONTRACTOR BEFORE PROCEEDING WITH ANY WORK.

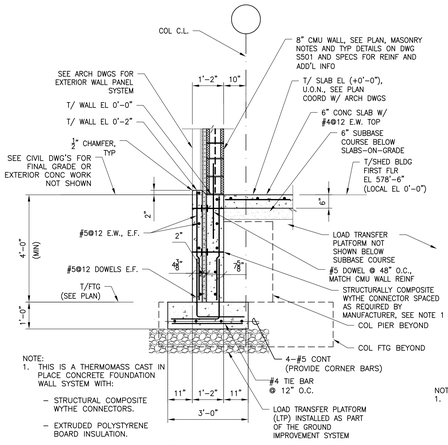
KEY PLAN:
PLAN NORTH

PROJECT:
SCIENCE & TECHNOLOGY BUILDING

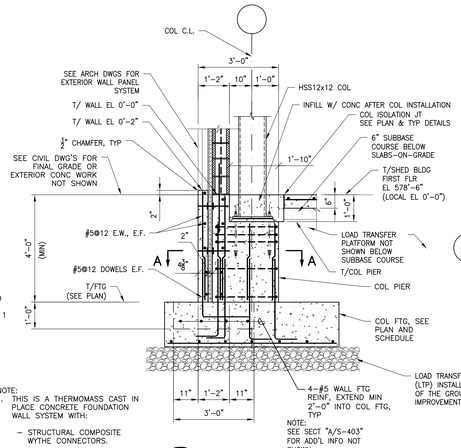
DRAWING TITLE:
HEAD BUILDING – FOUNDATION SECTIONS

PROJECT NO: 23000 | DATE: 9/23/2025
PHASE: REBID & CONSTRUCTION | SCALE: AS NOTED

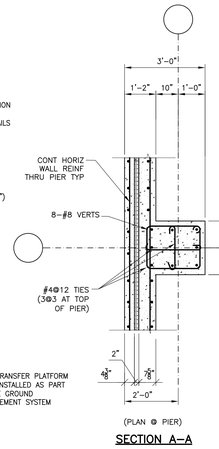
S-402



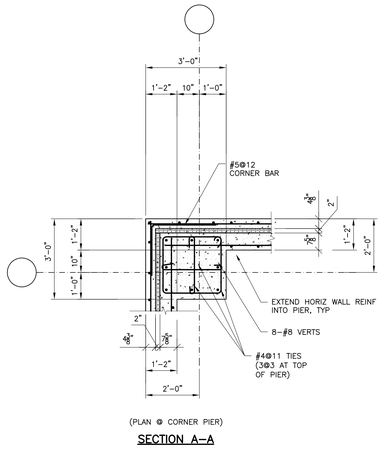
A S-403 SECTION 1/2"=1'-0"



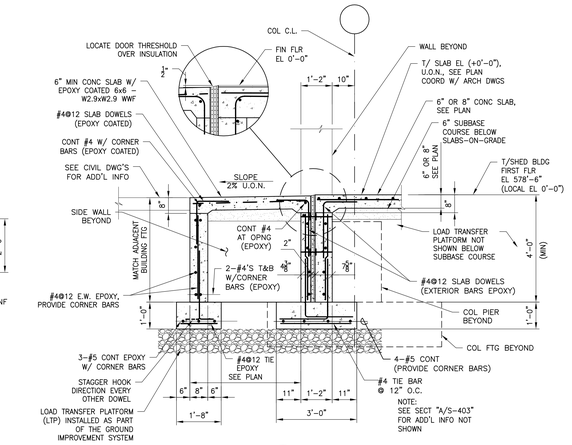
B S-403 SECTION 1/2"=1'-0"



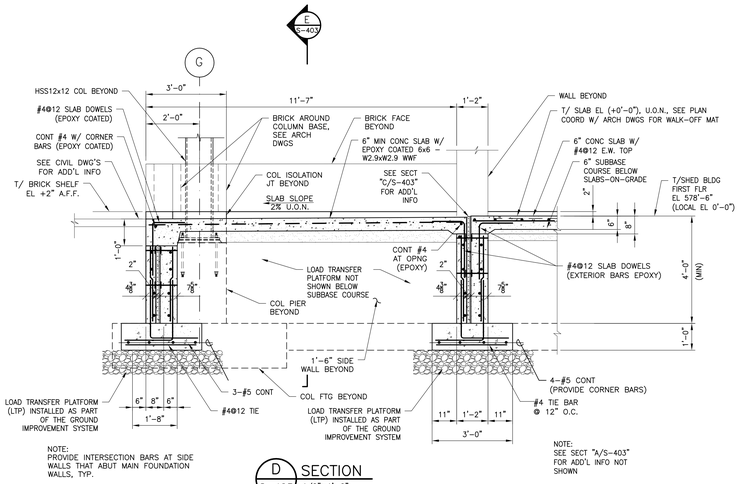
SECTION A–A



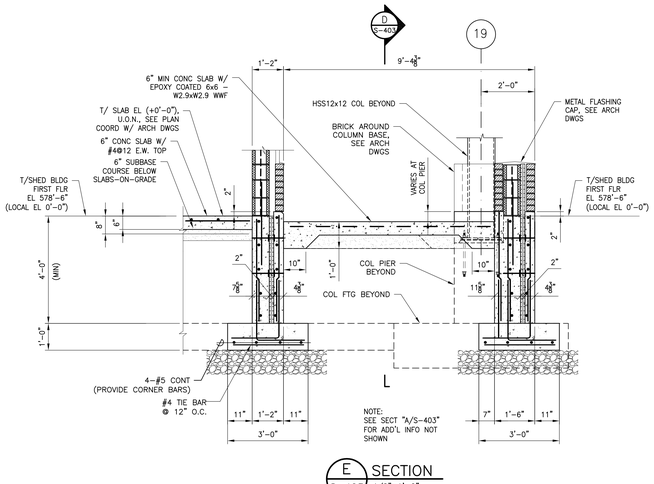
SECTION A–A



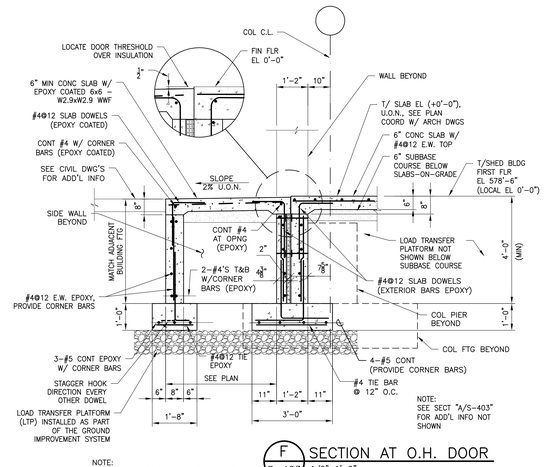
C S-403 SECTION AT MANDOOR 1/2"=1'-0"



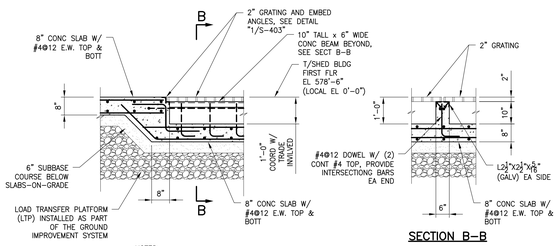
D S-403 SECTION 1/2"=1'-0"



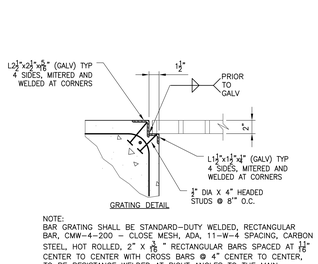
E S-403 SECTION 1/2"=1'-0"



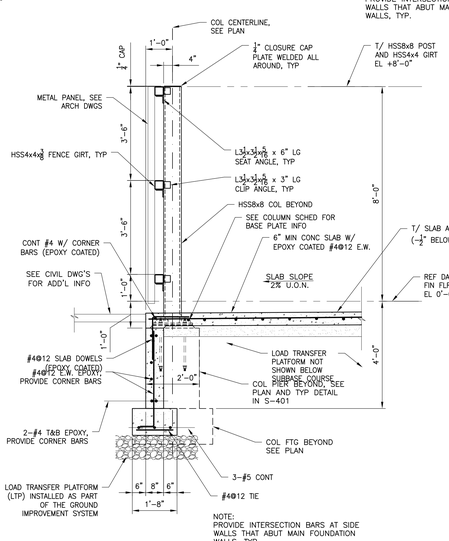
F S-403 SECTION AT O.H. DOOR 1/2"=1'-0"



G S-403 SECTION AT SAND PIT W/ REMOVABLE GRATING 1/2"=1'-0"



1 S-403 GRATING DETAIL 1 1/2"=1'-0"



H S-403 SECTION AT EXTERIOR FENCED AREA 1/2"=1'-0"

ONEIDA COUNTY NEW YORK 1798

MVCC
MOHAWK VALLEY COMMUNITY COLLEGE
1101 SHERMAN DRIVE
UTICA, NY 13501
(315) 792-5400

ARCHITECT:
MA MARCH ASSOCIATES ARCHITECTS & PLANNERS, PC
258 Genesee Street, Suite 300
Utica, New York 13501
315 733 3344

Mitchell Giurgola
Mitchell Giurgola Architects LLP
630 Ninth Avenue, Suite 711
New York, New York 10036
212 663 4000

STRUCTURAL ENGINEER:
Interactive Engineering Solutions, PC
1721 Black River Blvd, Suite L-1
Rome, NY 13440
315 339 7855
IE Solutions
Interactive Engineering Solutions P.C.
Certificate of Authorization No. 0022543
Expiration Date: 11/30/2027

MEP ENGINEER:
Towne Engineering
18 South Street
Utica, NY 13501
315 733 9000

SITE | CIVIL ENGINEER:
Appel Osborne Landscape Architecture
102 West Division Street, Suite 100
Syracuse, NY 13204
315 476 1022

SEAL:

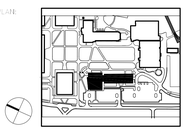
Douglas R. Cahill, PE
NYS Professional Engineer No. 61675
Expiration Date 3/31/2026

ISSUE/REVISION

NO.	DATE	COMMENTS
1	9/23/25	REBID & CONSTRUCTION

COPYRIGHT © 2018 MITCHELL GIURGOLA ARCHITECTS LLP
ALL DRAWINGS AND WRITTEN MATERIAL APPEARING HEREIN SHALL NOT BE REUSED AND VERIFIED BY THE OWNER FOR RECORD PURPOSES ONLY. NO USE SHALL BE MADE

KEY PLAN:



PROJECT:

SCIENCE & TECHNOLOGY BUILDING

DRAWING TITLE:

SHED BUILDING – FOUNDATION SECTIONS

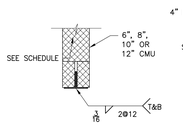
PROJECT NO: 23000	DATE: 9/23/2025
PHASE: REBID & CONSTRUCTION	SCALE: AS NOTED

S-403

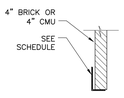
LINTEL SCHEDULE				
MARK	CLEAR OPENING	SIZE	WALL TYPE	REMARKS
L–1	0'–7" FT	2L 3x2½x5/16 LLV	6" CMU TYPE 1	——
L–2	0'–7" FT	2L 6x3½x5/16 LLV	8" CMU TYPE 1	——
L–3	0'–7" FT	2L 6x4x5/16" LLV	10" CMU TYPE 1	——
L–4	0'–7" FT	2L 5x5x⅜	12" CMU TYPE 1	——
L–5	4'–8" FT	L7x4x⅜" (LLV)	4" BRICK OR 4" CMU TYPE 2	——
L–6	4'–7" FT	HSS3½x3½x¼	4" CMU TYPE 2A	——
L–7	UP TO 10'–0"	W8x15+ ⅜" PLATE	8" CMU TYPE 3	——
L–8	UP TO 12'–0"	HSS12x6x⅜" + ⅜" PLATE	8" CMU TYPE 4	——

NOTES:
1. ALL OPENINGS THRU MASONRY WALLS MAY NOT BE SHOWN ON STRUCTURAL DRAWINGS. REFER TO ARCHITECTURAL AND MECHANICAL DRAWINGS FOR ALL OPENINGS REQUIRED IN CMU WALLS AND PROVIDE STEEL LINTELS PER SCHEDULE. (1 ANGLE PER EVERY 4" WYTHE OF MASONRY U.O.N.)
2. PENETRATIONS 16" OR SMALLER THROUGH MASONRY WALLS DO NOT NEED LINTELS U.O.N. BELOW;

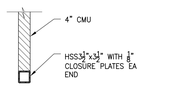
   PROVIDE NEW LINTELS PER THE SCHEDULE AS FOLLOWS:
   a. PROVIDE LINTELS IN MASONRY WALLS FOR NEW PENETRATIONS GREATER THAN 16" IN WIDTH.
   b. PROVIDE LINTELS IF OPENING IS DIRECTLY BELOW BEAM OR JOIST BEARING POCKET REGARDLESS OF OPENING WIDTH.
   c. PROVIDE LINTELS IN ALL NEW OR EXISTING OPENINGS IF ANY OF THESE OPENINGS ARE LOCATED LESS THAN 3 COURSES VERTICALLY OF EACH OTHER REGARDLESS OF OPENING WIDTHS.
3. PROVIDE 8" BEARING EACH END, TYP UNLESS OTHERWISE NOTED.
4. FOR SPANS NOT LISTED, CONSULT A/E.
5. ALL LINTELS IN EXTERIOR WALLS SHALL BE HOT–DIPPED GALVANIZED FINISH. SEE SPECIFICATIONS
6. THE GENERAL CONTRACTOR IS RESPONSIBLE FOR ALL MEANS AND METHODS ASSOCIATED WITH INSTALLATION OF ALL STEEL LINTELS, INCLUDING BUT NOT LIMITED TO DESIGN, INSTALLATION, AND REMOVAL OF ALL TEMPORARY SHORING AND BRACING AS REQUIRED FOR THE STRUCTURE AND BUILDING FEATURES. THE GENERAL CONTRACTOR IS RESPONSIBLE FOR ALL COSTS ASSOCIATED WITH OBTAINING THE SERVICES OF A QUALIFIED PROFESSIONAL ENGINEER LICENSED IN THE STATE OF NEW YORK TO PREPARE THE REQUIRED DESIGN AND SHORING DOCUMENTS TO PERFORM THIS WORK. THESE DOCUMENTS SHALL BE SIGNED AND SEALED BY THE LICENSED PROFESSIONAL ENGINEER RESPONSIBLE FOR THE DESIGN AND PREPARATION OF THESE DOCUMENTS AND SHALL BE SUBMITTED TO THE A/E FOR RECORD.



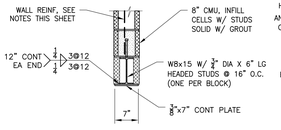
TYPE 1



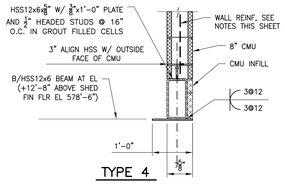
TYPE 2



TYPE 2A

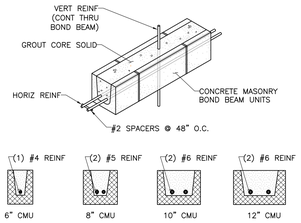


TYPE 3



TYPE 4

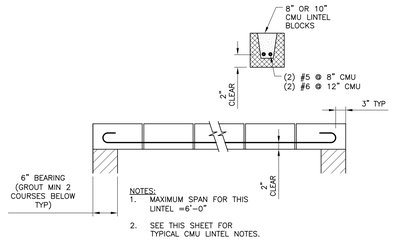
TYPICAL CMU LINTEL NOTES:
1. GROUT SOLID ALL MASONRY UNITS.
2. ALL REINFORCING BARS ARE HOOKED AROUND VERTICAL BARS AT THE ENDS. STIRRUPS SHALL TERMINATE IN FULL 180° HOOK.
3. LINTELS SHALL BEAR ON SOLID CMU OR BEAR ON 2 FILLED COURSES, U.O.N.
4. BOND PATTERN OF LINTEL TO MATCH ADJACENT WALL.
5. BOTTOM OF LINTEL SHALL BE SMOOTH MASONRY WITH NO CORES EXPOSED.
6. COORD LINTEL LOCATIONS W/ ARCHITECTURAL DRAWINGS.
7. SEE MASONRY GENERAL NOTES THIS SHEET FOR ADD'L INFO.



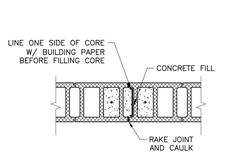
1 STEEL LINTEL SCHEDULE
S–501 3/4"=1'–0"

2 CMU LINTEL NOTES
S–501 3/4"=1'–0"

3 TYP CMU BOND BEAM
S–501 3/4"=1'–0"

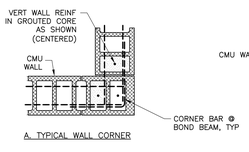


4 CMU LINTEL @ NON–BEARING
S–501 3/4"=1'–0"

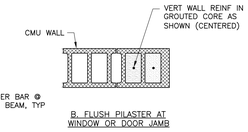


NOTES:
1. BOND BEAM REINF SHALL NOT BE LAPPED WITHIN 8'–0" OF CONTROL JOINT.
2. BOND BEAM REINF TO BE CONTINUOUS THRU CONTROL JOINT (WRAP WITH MASTIC FOR BOND BREAK)
3. ALL OTHER HORIZONTAL JOINT REINFORCEMENT TO BE DISCONTINUOUS AT CONTROL JOINTS.

5 TYP CMU CONTROL JOINT
S–501 3/4"=1'–0"

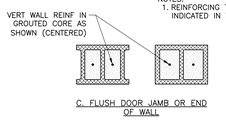


A. TYPICAL WALL CORNER

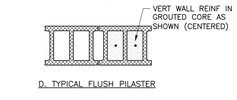


B. FLUSH PILASTER AT WINDOW OR DOOR JAMB

NOTES:
1. REINFORCING TO BE SAME SIZE AS ADJACENT WALL REINFORCING INDICATED IN THE MASONRY NOTES ON THIS SHEET.

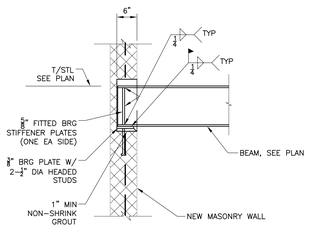


C. FLUSH DOOR JAMB OR END OF WALL



D. TYPICAL FLUSH PILASTER

6 SPECIAL MASONRY DETAILS
S–501 3/4"=1'–0"



NOTES:
1. INFILL BEAM POCKET SOLID AFTER BEAM INSTALLATION

7 TYPICAL BEAM POCKET
S–501 3/4"=1'–0"

MASONRY NOTES

M–1. ALL CONCRETE MASONRY SHALL CONFORM WITH ASTM C90 HOLLOW LOAD BEARING (HL) UNITS WITH A COMPRESSIVE STRENGTH OF 2150 PSI ON THE NET SECTION.

M–2. ALL MORTAR SHALL CONFORM WITH ASTM C270.

M–3. ALL GROUT SHALL CONFORM WITH ASTM C476 AND HAVE AN AVERAGE COMPRESSIVE STRENGTH OF 2500 PSI AT 28 DAYS. CONCRETE SHALL NOT BE USED IN LIEU OF MASONRY GROUT.

M–4. CENTER ALL VERTICAL REINFORCING IN CMU CORE AND HOLD IN POSITION WITH CAGING DEVICES.

M–5. THE MINIMUM LENGTH OF LAP FOR REINFORCING IN MASONRY WALLS UNLESS OTHERWISE NOTED SHALL BE AS FOLLOWS:

BAR NO	LAP
#3	18"
#4	24"
#5	30"
#6	36"
#7	42"

M–6. ALL BOND BEAMS SHALL BE CONTINUOUS AND SHALL BE FILLED WITH GROUT AND REINFORCED AS FOLLOWS:

BOND BEAM	REINFORCING
6" CMU	(1) #4
8" CMU	(2) #5
10" CMU	(2) #6
12" CMU	(2) #6

REINFORCING SHALL BE CONTINUOUS UNLESS OTHERWISE NOTED. PROVIDE HORIZONTAL BENT BARS AT CORNERS TO MAINTAIN CONTINUOUS REINFORCING.

IN ADDITION TO BOND BEAMS SHOWN ON ARCHITECTURAL AND STRUCTURAL SECTIONS AND DETAILS, PROVIDE ADDITIONAL BOND BEAMS VERTICALLY SPACED @ 8'–0" MAXIMUM, FULL HEIGHT OF WALLS.

M–7. GROUT SHALL BE PLACED IN THE VERTICAL CORES OF THE MASONRY UNITS UTILIZING THE LOW LIFT GROUTING METHOD SET FORTH IN NCMA–TEK 23A.

A) WEBS ADJACENT TO CORES TO BE GROUTED SHALL BE MORTARED. MORTAR SHALL BE STRUCK FLUSH WITH THE INSIDE FACE OF CORES TO BE GROUTED. CORES TO BE GROUTED SHALL BE CLEARED OF ALL MORTAR DROPPINGS AND OTHER DEBRIS PRIOR TO GROUTING.
B) THE MAXIMUM HEIGHT OF A GROUT LIFT SHALL BE 4 FEET.
C) STOP GROUT POURS 1½ INCHES BELOW THE UPPERMOST PORTION OF THE CAVITY BEING FILLED TO PROVIDE A KEY FOR THE NEXT LIFT OR POUR.
D) CONSOLIDATE GROUT BY VIBRATE TWICE WITH A MECHANICAL VIBRATOR EACH LIFT, ONCE IMMEDIATELY AFTER POUR AND ONCE APPROXIMATELY 30 MINUTES AFTER GROUT IS INSTALLED.
E) ALL REINFORCING STEEL SHALL BE INSPECTED IN PLACE BEFORE GROUTING AND THERE SHALL BE CONTINUOUS INSPECTION DURING THE GROUTING OPERATION.

M–8. PROVIDE VERTICAL #5'S IN GROUTED CORES AT 48 INCHES O.C. FOR ALL 8" AND 10" CMU WALLS, TYPICAL UNLESS OTHERWISE NOTED IN SECTIONS OR TYPICAL DETAILS.

PROVIDE VERTICAL #6'S IN GROUTED CORES AT 48 INCHES O.C. FOR ALL 12" CMU WALLS, TYPICAL UNLESS OTHERWISE NOTED IN SECTIONS OR TYPICAL DETAILS.

PROVIDE VERTICAL #4'S IN GROUTED CORES AT 48 INCHES O.C. FOR ALL 6" CMU WALLS, TYPICAL UNLESS OTHERWISE NOTED IN SECTIONS OR TYPICAL DETAILS.

PROVIDE DOWELS INTO FOUNDATION WALLS MATCHING SIZE AND SPACING OF WALL VERTICAL BARS.

M–9. PLACE #5 VERTICAL REINFORCING BARS IN TWO GROUTED CORES EACH SIDE OF OPENINGS EXTENDING FULL HEIGHT OF WALL FOR ALL 8" AND 10" CMU WALLS, TYPICAL UNLESS OTHERWISE NOTED IN SECTIONS OR TYPICAL DETAILS.

PLACE #6 VERTICAL REINFORCING BARS IN TWO GROUTED CORES EACH SIDE OF OPENINGS EXTENDING FULL HEIGHT OF WALL FOR ALL 12" CMU WALLS, TYPICAL UNLESS OTHERWISE NOTED IN SECTIONS OR TYPICAL DETAILS.

PLACE #4 VERTICAL REINFORCING BARS IN TWO GROUTED CORES EACH SIDE OF OPENINGS EXTENDING FULL HEIGHT OF WALL FOR ALL 6" CMU WALLS, TYPICAL UNLESS OTHERWISE NOTED IN SECTIONS OR TYPICAL DETAILS.

PROVIDE DOWELS INTO FOUNDATION WALLS MATCHING SIZE AND SPACING OF WALL VERTICAL BARS.

M–10. PROVIDE TWO VERTICAL REINFORCING BAR (SAME SIZE AS ADJACENT WALL) FULL HEIGHT OF WALL AT CORNERS, INTERSECTIONS, WALL ENDS, JAMBS AND EACH SIDE OF CONTROL JOINTS, U.O.N.

M–11. SUBMIT SHOP DRAWINGS DETAILING ALL REINFORCING STEEL IN REINFORCED MASONRY CONSTRUCTION INCLUDING DETAILS OF ALL BENT BARS, VERTICAL REINFORCING AND HORIZONTAL BOND BEAM REINFORCING. INCLUDE PLANS, BEARING POCKETS AND ELEVATIONS AS REQUIRED TO CLEARLY SHOW ALL REINFORCING.

M–12. NEW PENETRATIONS 16" OR SMALLER THROUGH EXIST MASONRY BEARING WALLS DO NOT NEED LINTELS. PROVIDE LINTELS AS REQ'D IN EXIST MASONRY BEARING WALLS FOR NEW PENETRATIONS GREATER THAN 16" IN WIDTH.

ONEIDA COUNTY NEW YORK 1798

MVCC MOHAWK VALLEY COMMUNITY COLLEGE
1101 SHERMAN DRIVE
UTICA, NY 13501
(315) 792–5400

ARCHITECT:
MARCH ASSOCIATES ARCHITECTS & PLANNERS, PC
258 Genesee Street, Suite 300
Utica, New York 13501
315 733 3344

Mitchell Giurgola
Mitchell Giurgola Architects LLP
630 Ninth Avenue, Suite 711
New York, New York 10036
212 663 4000

STRUCTURAL ENGINEER:
Interactive Engineering Solutions, PC
1721 Black River Blvd, Suite L–1
Rome, NY 13440
315 339 7855
IE Solutions
Interactive Engineering Solutions P.C.
Certificate of Authorization No. 0922543
Expiration Date: 11/30/2027

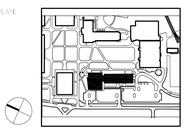
MEP ENGINEER:
Towne Engineering
18 South Street
Utica, NY 13501
315 733 9000

SITE | CIVIL ENGINEER:
Appel Osborne Landscape Architecture
102 West Division Street, Suite 100
Syracuse, NY 13204
315 476 1022

SEAL:
Douglas R. Cahill, PE
NYS Professional Engineer No. 61675
Expiration Date 3/31/2026

ISSUANCE/REVISION:		
NO.	DATE	COMMENTS
1	9/23/25	REBID & CONSTRUCTION

COPYRIGHT © 2018 MITCHELL GIURGOLA ARCHITECTS LLP
ALL IDEAS DESIGNS ARRANGEMENTS AND PLANS INDICATED OR REPRESENTED BY THIS DRAWING ARE OWNED BY AND THE PROPERTY OF MITCHELL GIURGOLA ARCHITECTS LLP AND WERE CREATED AND DEVELOPED FOR USE ON AND IN CONNECTION WITH THE SPECIFIED PROJECT. NONE OF SUCH IDEAS DESIGNS ARRANGEMENTS OR PLANS SHALL BE USED BY OR DISCLOSED TO ANY PERSON FIRM OR CORPORATION FOR ANY PURPOSE WHATSOEVER WITHOUT THE PRIOR WRITTEN PERMISSION OF MITCHELL GIURGOLA ARCHITECTS LLP. VISUAL CONTACT WITH THESE DRAWINGS SHALL CONSTITUTE PRIMA FACIE EVIDENCE OF ACCEPTANCE OF THESE RESTRICTIONS.

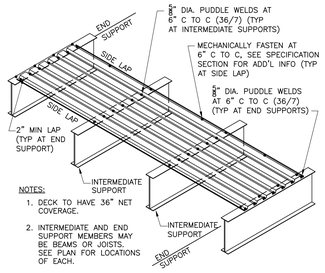
KEY PLAN:

PLAN NORTH

PROJECT:
SCIENCE & TECHNOLOGY BUILDING

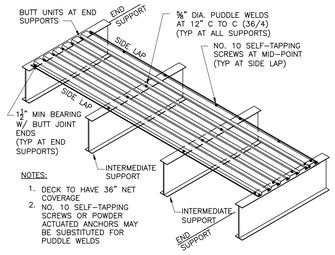
DRAWING TITLE:
MASONRY DETAILS, LINTEL SCHEDULE AND NOTES

PROJECT NO: 23000	DATE: 9/23/2025
PHASE: REBID & CONSTRUCTION	SCALE: AS NOTED

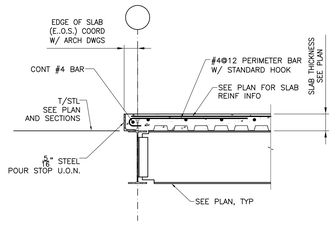
S-501



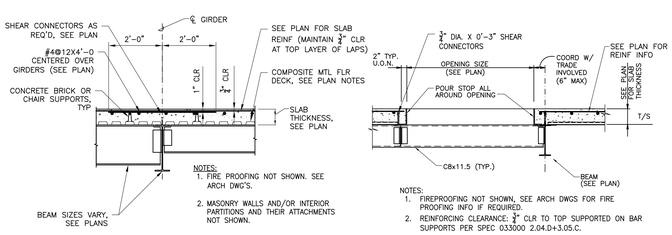
1 S-601 TYPICAL ROOF DECK ATTACHMENT
NTS



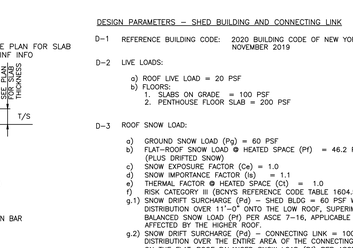
2 S-601 TYPICAL COMPOSITE FLOOR DECK ATTACHMENT
NTS



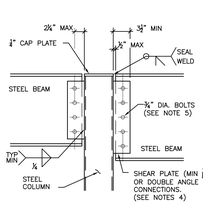
3 S-601 TYPICAL SLAB REINFORCING AT PERIMETER
NO SCALE



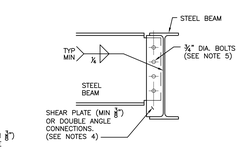
4 S-601 TYPICAL SLAB REINFORCING OVER GIRDERS
NTS



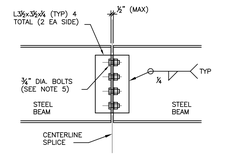
6 S-601 TYPICAL SECTION AT COMPOSITE BEAM
NTS



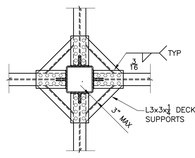
A. SIMPLE BEAM (COLUMN)



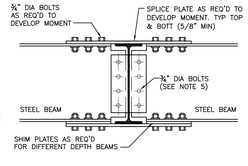
B. SIMPLE BEAM (MID BEAM)



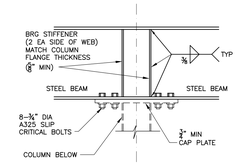
C. TYPICAL BEAM SPLICE



D. TYPICAL DECK SUPPORT AT COL

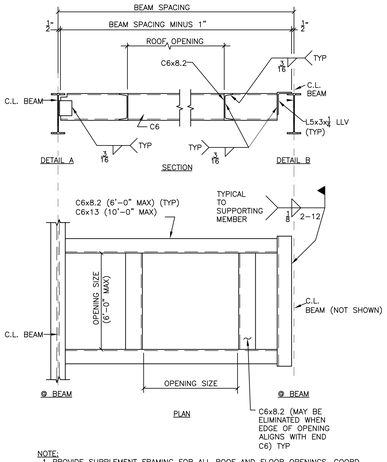


E. BEAM MOMENT SPLICE



F. CANTILEVER BEAMS

NOTES:
1. INTENT OF THESE DETAILS IS TO PROVIDE TYPICAL FRAMING INFORMATION FOR CONDITIONS NOT SPECIFICALLY COVERED BY SPECIFIC SECTIONS OR DETAILS ELSEWHERE. (SOME DETAILS MAY NOT APPLY).
2. EXTEND DEEPER BEAM OVER TOP OF COLUMNS AND FRAME OTHER MEMBERS INTO IT UNLESS OTHERWISE NOTED.
3. AT CORNERS OR END WALLS USE 2 BOLTS AND EXTEND BEAM AND CAP PLATE 1/2" BEYOND EXTERIOR FACE OF COLUMN.
4. SHEAR PLATES WELDED TO WEB OF BEAM TO BE 5/8" THICK FOR W27 BEAMS AND LARGER.
5. DESIGN CONNECTIONS IN ACCORDANCE WITH AISC FOR REACTIONS INDICATED ON PLANS UNLESS OTHERWISE NOTED. WHERE REACTIONS ARE NOT SHOWN, THE CONNECTION SHALL BE DESIGNED FOR 50% OF THE TOTAL ALLOWABLE UNIFORM LOAD ON THE SPAN PER THE LATEST EDITION OF THE AISC MANUAL OR 6 kips, WHICHEVER IS LARGER, U.O.N.

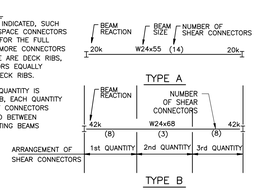


NOTE:
1. PROVIDE SUPPLEMENT FRAMING FOR ALL ROOF AND FLOOR OPENINGS. COORD SIZE AND LOCATIONS W/ APPROVED EQUIPMENT SHOP DWG'S AND TRADES INVOLVED.
2. AT CONTRACTORS OPTION, DETAIL A OR DETAIL B MAY BE USED FOR NEW ROOF OPENINGS TO SUIT FABRICATORS DETAILING PREFERENCE.

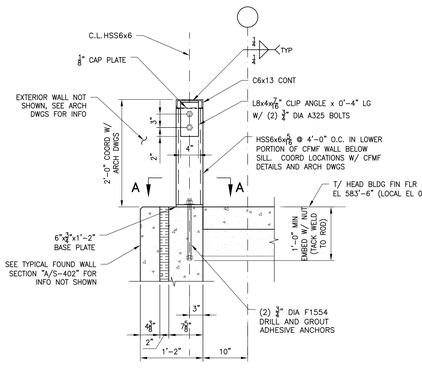
SHED BLDG

5 S-601 TYPICAL CONCRETE FLOOR OPENING FRAME
NTS

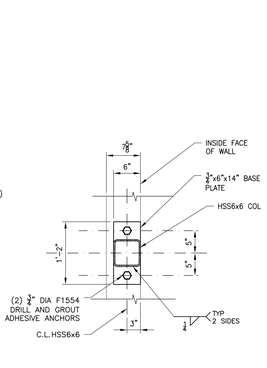
SHEAR CONNECTOR NOTES:
1) WHERE ONE QUANTITY IS INDICATED, SUCH AS INDICATED IN TYPE A, SPACE CONNECTORS UNIFORMLY IN DECK RIBS FOR THE FULL LENGTH OF BEAM. WHERE MORE CONNECTORS ARE REQUIRED THAN THERE ARE DECK RIBS, INSTALL EXCESS CONNECTORS EQUALLY SPACED DOUBLER UP IN DECK RIBS.
2) WHERE MORE THAN ONE QUANTITY IS INDICATED SUCH AS TYPE B, EACH QUANTITY INDICATES THE NUMBER OF CONNECTORS REQUIRED EQUALLY SPACED BETWEEN CENTERLINES OF INTERSECTING BEAMS



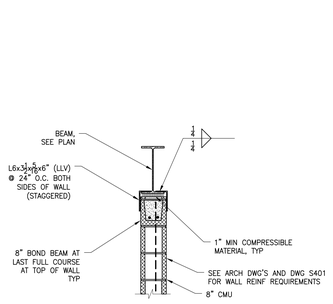
7 S-601 COMPOSITE BEAM NOMENCLATURE
NTS



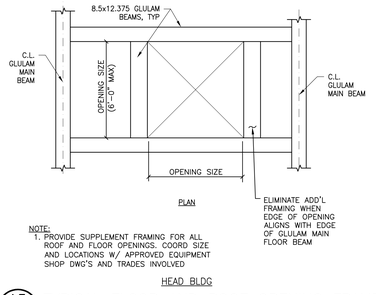
10 S-601 CFMF SILL DETAIL – HEAD BLDG
1"=1'-0"



SECTION A–A



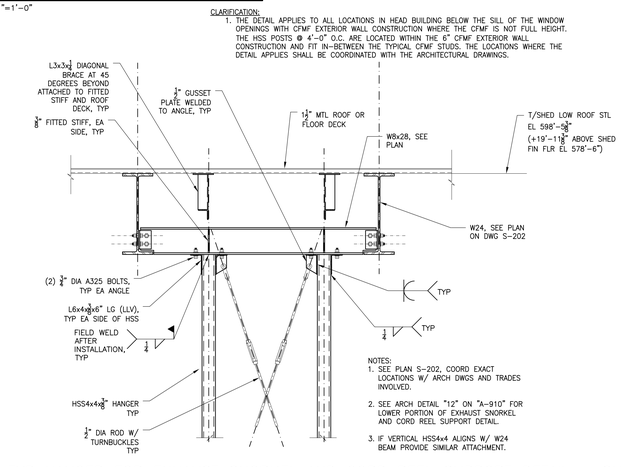
11 S-601 TYP CMU WALL BRACE AT BEAM
3/4"=1'-0"



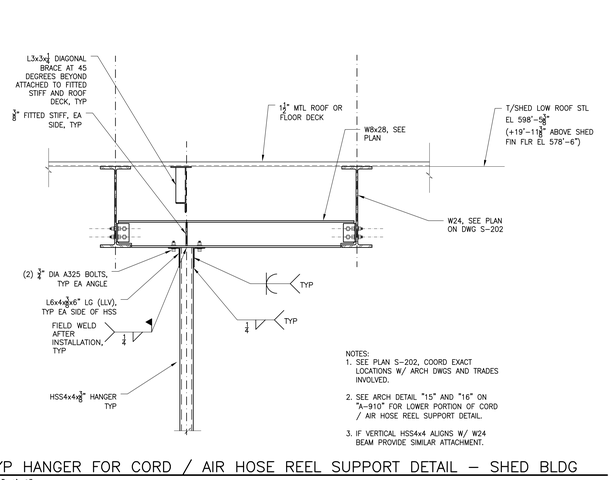
NOTE:
1. PROVIDE SUPPLEMENT FRAMING FOR ALL ROOF AND FLOOR OPENINGS. COORD SIZE AND LOCATIONS W/ APPROVED EQUIPMENT SHOP DWG'S AND TRADES INVOLVED

HEAD BLDG

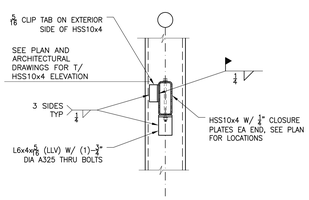
15 S-601 TYPICAL FLOOR AND ROOF OPENING FRAME
NO SCALE



12A S-601 TYP HANGER FOR EXHAUST SNORKEL AND CORD REEL SUPPORT DETAIL – SHED BLDG
3/4"=1'-0"
SEE ARCH DWGS FOR TYPICAL DETAIL AT HEAD BUILDING

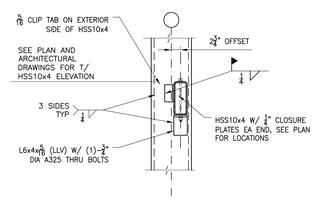


12B S-601 TYP HANGER FOR CORD / AIR HOSE REEL SUPPORT DETAIL – SHED BLDG
3/4"=1'-0"
SEE ARCH DWGS FOR TYPICAL DETAIL AT HEAD BUILDING



FOR SUPPORT OF ELECTRICAL PANEL

13 S-601 TYP CONN HSS BEAM TO HSS COL
3/4"=1'-0"



FOR SUPPORT OF WHITE BOARD

14 S-601 TYP CONN HSS BEAM TO HSS COL
3/4"=1'-0"

NOTE:
TYPICAL DETAILS, NOTES AND DESIGN PARAMETERS SHOWN ON THIS SHEET ARE RELATED TO THE SHED BUILDING UNLESS NOTED OTHERWISE.

DESIGN PARAMETERS – SHED BUILDING AND CONNECTING LINK

D–1 REFERENCE BUILDING CODE: 2020 BUILDING CODE OF NEW YORK STATE (BCNYS) NOVEMBER 2019

D–2 LIVE LOADS:
a) ROOF LIVE LOAD = 20 PSF
b) FLOORS:
1. SLABS ON GRADE = 100 PSF
2. PENTHOUSE FLOOR SLAB = 200 PSF

D–3 ROOF SNOW LOAD:
a) GROUND SNOW LOAD (Pg) = 60 PSF
b) FLAT-ROOF SNOW LOAD @ HEATED SPACE (Pf) = 46.2 PSF (PLUS DRIFTED SNOW)
c) SNOW EXPOSURE FACTOR (Ce) = 1.0
d) SNOW IMPORTANCE FACTOR (Is) = 1.1
e) THERMAL FACTOR @ HEATED SPACE (Ct) = 1.0
f) RISK CATEGORY III (BCNYS REFERENCE CODE TABLE 1604.5/ASCE 7–16
g.1) SNOW DRIFT SURCHARGE (Pd) – SHED BLDG = 60 PSF WITH A TRIANGULAR DISTRIBUTION OVER 11'–0" ONTO THE LOW ROOF, SUPERIMPOSED ON THE FLAT-ROOF BALANCED SNOW LOAD (Pf) PER ASCE 7–16, APPLICABLE FOR THE LOW ROOF AFFECTED BY THE HIGHER ROOF.
g.2) SNOW DRIFT SURCHARGE (Pd) – CONNECTING LINK = 100 PSF WITH A UNIFORM DISTRIBUTION OVER THE ENTIRE AREA OF THE CONNECTING LINK ROOF, SUPERIMPOSED ON THE FLAT-ROOF BALANCED SNOW LOAD (Pf) PER ASCE 7–16, APPLICABLE FOR THE LOWER ROOF AFFECTED BY THE HIGH ROOF.
h) ROOF DESIGN SNOW LOAD (BALANCED SNOW) = 46.2 PSF

D–4 WIND LOAD
a) WIND SPEED (3-SECOND GUST),
V = 120 MPH (BASIC WIND SPEED, BCNYS FIGURE 1609.3 (2), RISK CATEGORY III)
V ASD = 93 MPH (BCNYS TABLE 1609.3.1 AND EQUATION 16–33)
b) RISK CATEGORY III (BCNYS TABLE 1604.5/ASCE 7–16)
c) WIND EXPOSURE CATEGORY B
d) INTERNAL PRESSURE COEFFICIENT (GCpi) = +/– 0.18
e) COMPONENTS AND CLADDING: POSITIVE (+) = INWARD PRESSURE
NEGATIVE (–) = OUTWARD PRESSURE (SUCTION)

WALLS:	+20 PSF, –24 PSF WITHIN 6.5 FT OF CORNERS
	+20 PSF, –20 PSF ELSEWHERE
ROOF:	+10 PSF, –45 PSF WITHIN 6.5 FT OF CORNERS AND EDGE
	+10 PSF, –18 PSF ELSEWHERE

D–5 EARTHQUAKE LOADS
a) RISK CATEGORY III (BCNYS REFERENCE CODE TABLE 1604.5/ASCE 7–16)
b) SEISMIC IMPORTANCE FACTOR: Ie=1.25
c) SITE CLASS: SITE CLASS "C" (PER GEOTECH REPORT)
d) SPECTRAL RESPONSE COEFFICIENTS:

SMS=0.223G	SS=0.177G
SM1=0.086G	S1=0.057G
SDS=0.153G	FA=1.3
SD1=0.057G	FV=1.5

e) SEISMIC DESIGN CATEGORY: DESIGN CATEGORY "A"

STRUCTURAL STEEL / METAL DECK NOTES

S–1. STEEL ROOF DECK SHALL CONFORM TO THE STEEL DECK INSTITUTE AND FACTORY MUTUAL STANDARDS. (TWO OR MORE SPAN LOADING CONDITIONS). TYPICAL ALL ROOF AND FLOOR AREAS UNLESS OTHERWISE NOTED. SEE PLAN FOR SIZE.

S–2. STRUCTURAL STEEL SHALL BE AS FOLLOWS EXCEPT AS OTHERWISE NOTED:
STRUCTURAL SHAPES – ASTM A992 (Fy = 50KSI)
STRUCTURAL TUBES – ASTM A500 (Fy = 46KSI) GRADE B
STRUCTURAL PIPE – ASTM A501 (Fy = 36KSI) OR ASTM A53, TYPE E OR S, GRADE B (Fy = 36KSI)
STRUCTURAL BARS, ANGLES, AND PLATES – ASTM A36 (Fy = 36KSI)

S–3. FINAL LOCATION OF ALL CLIP ANGLES ATTACHED TO BEAMS WHICH SUPPORT EXTERIOR AND INTERIOR WALLS SHALL BE COORDINATED WITH DIMENSIONAL REQUIREMENTS OF ARCHITECTURAL DETAILS AND SHALL BE INSTALLED ACCOUNTING FOR ROLLING TOLERANCES OF STEEL MEMBERS TO PROVIDE PROPER ALIGNMENT.

S–4. STRUCTURAL STEEL SHALL BE DETAILED, FABRICATED AND ERECTED IN ACCORDANCE WITH THE AMERICAN INSTITUTE OF STEEL CONSTRUCTION'S "CODE OF STANDARD PRACTICE FOR STEEL BUILDINGS AND BRIDGES" AND THE SPECIFICATIONS. REF SPECS FOR SHOP DRAWING REQUIREMENTS.

S–5. FABRICATE AND ERECT ALL STRUCTURAL STEEL WITH RESIDUAL MILL CAMBER UPWARDS U.O.N..

S–6. FIELD CONNECTIONS SHALL BE BOLTED WITH 3/4" DIA ASTM A325 BOLTS (PROVIDE STD HOLES) EXCEPT AS OTHERWISE NOTED AND WHERE WELDING IS INDICATED ON THE DRAWINGS AND IN THE SPECIFICATIONS. USE BEARING–TYPE CONNECTIONS WITH THREADS IN THE SHEAR PLANE AND SNUG TIGHT. (USE SLIP CRITICAL CONNECTION IF SLOTTED HOLES ARE USED OR AS INDICATED ON DRAWINGS).

S–7. CONTRACTOR SHALL VERIFY ALL DIMENSIONS AND EXISTING CONDITIONS AND SHALL NOTIFY ARCH/ENG OF ALL DISCREPANCIES PRIOR TO STARTING WORK.

S–8. CONTRACTOR SHALL USE EXTREME CARE AND PROVIDE ADD'L PROTECTION TO SAFEGUARD THE STRUCTURE FROM DAMAGE AND / OR FIRE DURING ALL CONSTRUCTION ACTIVITIES AND PROCEDURES, INCLUDING, BUT NOT LIMITED TO DEMOLITION, ERECTION, INSTALLATION, REINFORCEMENT, WELDING, ETC.

S–9. ALL WELDING SHALL COMPLY WITH THE AMERICAN WELDING SOCIETY (AWS) STRUCTURAL WELDING CODE D1.1. ALL WELDING SHALL BE PERFORMED BY AWS QUALIFIED OPERATORS USING E70XX ELECTRODES. REMOVE ALL DIRT, GREASE, PAINT AND BURRS WITHIN 3" OF ALL WELDS.

TESTING AGENCY SERVICES DURING CONSTRUCTION

TS–1. IT IS REQUIRED THAT THE OWNER CONTRACT WITH AN APPROVED TESTING AGENCY DURING CONSTRUCTION TO VERIFY COMPLIANCE WITH THE CONTRACT DOCUMENTS. REFER TO THE PROJECT MANUAL DIVISION 1, SPECIFICATION SECTION 014533 "CODE REQUIRED SPECIAL INSPECTIONS AND PROCEDURES" FOR ADDITIONAL INFORMATION.

ONEIDA COUNTY NEW YORK 1798
MVCC
MOHAWK VALLEY COMMUNITY COLLEGE
1101 SHERMAN DRIVE
UTICA, NY 13501
(315) 792–5400

ARCHITECT:
MARCH ASSOCIATES ARCHITECTS & PLANNERS, PC
258 Genesee Street, Suite 300
Utica, New York 13501
315 733 3344

Mitchell Giurgola
Mitchell Giurgola Architects LLP
630 Ninth Avenue, Suite 711
New York, New York 10036
212 663 4000

STRUCTURAL ENGINEER:
Interactive Engineering Solutions, PC
1721 Black River Blvd, Suite L–1
Rome, NY 13440
315 339 7855
IE Solutions
Interactive Engineering Solutions, PC
Interactive Engineering Solutions P.C.
Certificate of Authorization No. 0922543
Expiration Date: 11/30/2027

MEP ENGINEER:
Towne Engineering
18 South Street
Utica, NY 13501
315 733 9000

SITE | CIVIL ENGINEER:
Appel Osborne Landscape Architecture
102 West Division Street, Suite 100
Syracuse, NY 13204
315 476 1022

SEAL:
STATE OF NEW YORK DOUGLAS R. CAHILL 61675 LICENSED PROFESSIONAL ENGINEER
Douglas R. Cahill, PE
NYS Professional Engineer No. 61675
Expiration Date 3/31/2026

ISSUE/REVISION:

NO.	DATE	COMMENTS
1	9/23/25	REBID & CONSTRUCTION

COPYRIGHT © 2018 MITCHELL GIURGOLA ARCHITECTS LLP
ALL MATERIALS AND DIGITAL CONTENTS SHALL BE PROTECTED AND VERIFIED BY THE CONTRACTOR BEFORE PROCEEDING WITH THE WORK.

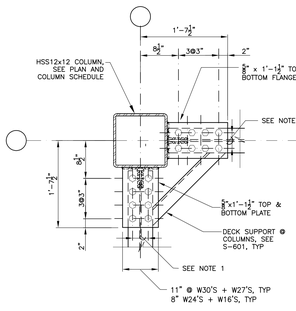
KEY PLAN:
PLAN NORTH

PROJECT:
SCIENCE & TECHNOLOGY BUILDING

DRAWING TITLE:
SHED AND HEAD BUILDING – TYPICAL FRAMING DETAILS, DESIGN PARAMETERS AND NOTES

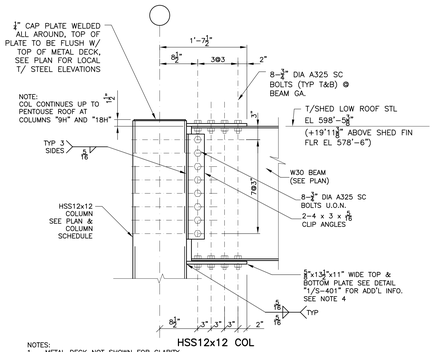
PROJECT NO: 23000 | DATE: 9/23/2025
PHASE: REBID & CONSTRUCTION | SCALE: AS NOTED

S-601



NOTES:
1. COORDINATE BOLT HOLE GAUGE WITH MEMBER SIZES AS SHOWN ON PLAN.
2. DETAIL SHOWS FRAMING MEMBERS ON ONE SIDE OF COLUMN CENTERLINE. HOWEVER, MOMENT CONNECTIONS SHOWN APPLY TO ALL BEAMS NOTED ON THE PLAN TO HAVE A MOMENT CONNECTION THAT FRAMES INTO COLUMNS. BOLTING, WELDING AND PLATE SIZES SHOWN ARE THE MINIMUM CONNECTION REQUIREMENTS.
3. ALL TOP OF STEEL ELEVATIONS SHOWN ON THIS SHEET ARE MEASURED FROM FINISH SHED FLOOR EL 578'-6" (0'-0").
4. SEE NOTES 1 THRU 5 ON DETAIL "2/S-602" FOR INFO NOT SHOWN.

1 S-602 MOMENT CONNECTION DETAIL — TOP AND BOTTOM FLANGE PLATES
1"=1'-0"

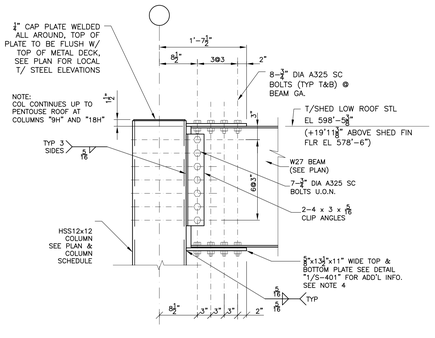


HSS12x12 COL

NOTES:
1. METAL DECK NOT SHOWN FOR CLARITY.
2. DETAIL SHOWS FRAMING MEMBER ON ONE SIDE OF COLUMN CENTERLINE. HOWEVER, MOMENT CONNECTION SHOWN APPLIES TO ALL BEAMS FRAMING INTO COLUMN FLANGES AT CONTINUOUS COLUMNS. BOLTING, WELDING AND PLATE SIZES SHOWN ARE THE MINIMUM CONNECTION REQUIREMENTS.
3. TO MEET THE CONTRACTOR'S SHOP STANDARDS AND ERECTION PROCEDURES, ALTERNATE CONNECTION DETAILS MAY BE SUBMITTED BY THE CONTRACTOR TO THE A/E FOR THEIR REVIEW AND CONSIDERATION PRIOR TO PREPARATION OF FABRICATION DRAWINGS. IF APPROVED, SUBSTITUTIONS SHALL BE IMPLEMENTED AT NO ADDITIONAL COST TO THE OWNER OR A/E. AN ACCEPTABLE SUBSTITUTION IS TO USE A SINGLE SHEAR TAB PLATE IN LIEU OF THE 2-4x3x⅜"CLIP ANGLES SHOWN IN THE DETAILS. THE SINGLE SHEAR TAB PLATE CONNECTION SHALL BE DESIGNED TO SUPPORT THE MEMBERS UN-FACTORED VERTICAL END REACTIONS (GRAVITY LOADS) SHOWN ON THE SHED BUILDING FRAMING PLANS ON DRAWINGS S-203 AND S-302.
4. FINGER SHIMS SHALL BE PROVIDED FOR ALL BOTTOM PLANGE PLATES TO ALLOW FOR SNUG FIT AND TO AVOID BENDING OF BOTTOM FLANGE PLATE DURING TIGHTENING OF BOLTS.
5. DO NOT SHOP PRIME / PAINT SURFACES TO BE HIGH STRENGTH BOLTED W/ SLIP CRITICAL (SC) CONNECTIONS, TYPICAL ALL MOMENT CONNECTIONS.

TYPICAL MOMENT CONNECTION AT LOW ROOF/PENTHOUSE FLOOR W30 – NO SLOPE

2 S-602 MOMENT CONNECTION DETAIL
1"=1'-0" 0 1'

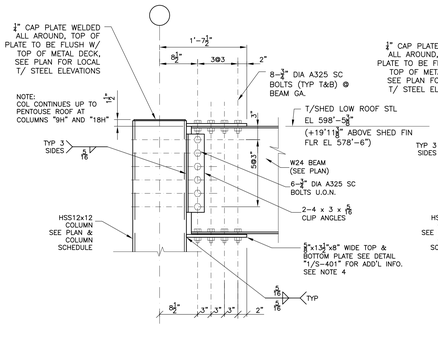


HSS12x12 COL

NOTE:
SEE NOTES 1 THRU 5 ON DETAIL "2/S-602" FOR INFO NOT SHOWN.

TYPICAL MOMENT CONNECTION AT LOW ROOF/PENTHOUSE FLOOR W27 – NO SLOPE

3 S-602 MOMENT CONNECTION DETAIL
1"=1'-0" 0 1'

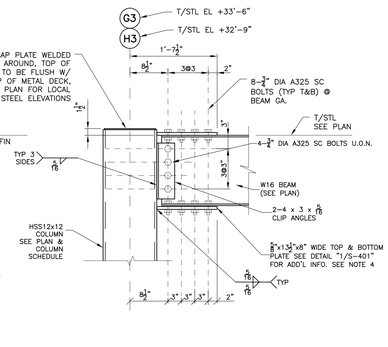


HSS12x12 COL

NOTE:
SEE NOTES 1 THRU 5 ON DETAIL "2/S-602" FOR INFO NOT SHOWN.

TYPICAL MOMENT CONNECTION AT LOW ROOF/PENTHOUSE FLOOR W24 – NO SLOPE

4 S-602 MOMENT CONNECTION DETAIL
1"=1'-0" 0 1'

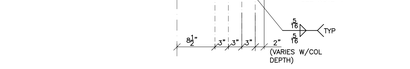


HSS12x12 COL

NOTE:
SEE NOTES 1 THRU 5 ON DETAIL "2/S-602" FOR INFO NOT SHOWN.

TYPICAL MOMENT CONNECTION AT PENTHOUSE HIGH ROOF W16 – NO SLOPE

5 S-602 MOMENT CONNECTION DETAIL
1"=1'-0" 0 1'

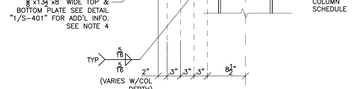


HSS12x12 COL

NOTE:
SEE NOTES 1 THRU 5 ON DETAIL "2/S-602" FOR INFO NOT SHOWN.

TYPICAL MOMENT CONNECTION AT PENTHOUSE HIGH ROOF W16 – TOP OF SLOPE

6 S-602 MOMENT CONNECTION DETAIL
1"=1'-0" 0 1'



HSS12x12 COL

NOTE:
SEE NOTES 1 THRU 5 ON DETAIL "2/S-602" FOR INFO NOT SHOWN.

TYPICAL MOMENT CONNECTION AT PENTHOUSE HIGH ROOF W16 – BOTTOM OF SLOPE

7 S-602 MOMENT CONNECTION DETAIL
1"=1'-0" 0 1'

ONEIDA COUNTY NEW YORK 1798

MVCC
MOHAWK VALLEY COMMUNITY COLLEGE
1101 SHERMAN DRIVE
UTICA, NY 13501
(315) 792-5400

ARCHITECT:
MARCH ASSOCIATES ARCHITECTS & PLANNERS, PC
258 Genesee Street, Suite 300
Utica, New York 13501
315 733 3344

Mitchell Giurgola
Mitchell Giurgola Architects LLP
630 Ninth Avenue, Suite 711
New York, New York 10036
212 663 4000

STRUCTURAL ENGINEER:
Interactive Engineering Solutions, PC
1721 Black River Blvd, Suite L-1
Rome, NY 13440
315 339 7855
IE Solutions — Interactive Engineering Solutions, PC
Interactive Engineering Solutions P.C.
Certificate of Authorization No. 0922543
Expiration Date: 11/30/2027

MEP ENGINEER:
Towne Engineering
18 South Street
Utica, NY 13501
315 733 9000

SITE | CIVIL ENGINEER:
Appel Osborne Landscape Architecture
102 West Division Street, Suite 100
Syracuse, NY 13204
315 476 1022

SEAL:
STATE OF NEW YORK — DOUGLAS R. CAHILL — 061675 — LICENSED PROFESSIONAL ENGINEER

Douglas R. Cahill, PE
NYS Professional Engineer No. 61675
Expiration Date 3/31/2026

ISSUE/REVISION:

NO.	DATE	COMMENTS
1	9/23/25	REBID & CONSTRUCTION

COPYRIGHT © 2018 MITCHELL GIURGOLA ARCHITECTS LLP
THESE DRAWINGS & SPECIFICATIONS ARE COPYRIGHTED AND ONLY FOR USE IN CONNECTION WITH THIS PROJECT. THEY MAY NOT BE USED, PUBLISHED, OR REPRODUCED WITHOUT THE WRITTEN PERMISSION OF MITCHELL GIURGOLA ARCHITECTS LLP. ALL COMMON LAW, STATUTORY AND OTHER RESERVED RIGHTS, INCLUDING COPYRIGHT, ARE RESERVED.

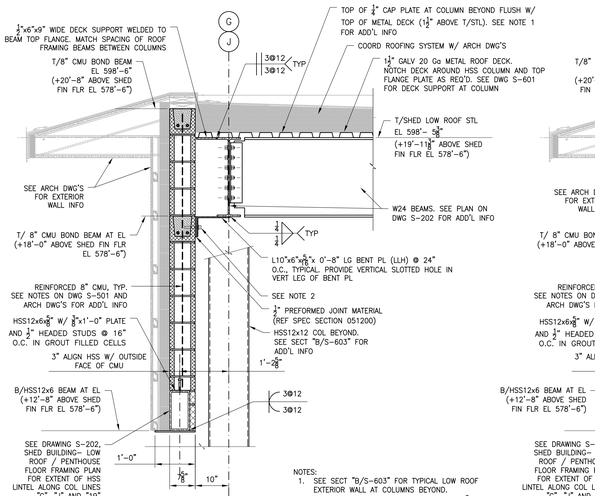
KEY PLAN:
PLAN NORTH

PROJECT:
SCIENCE & TECHNOLOGY BUILDING

DRAWING TITLE:
SHED BUILDING – TYPICAL MOMENT CONNECTION SECTIONS AND DETAILS

PROJECT NO: 23000	DATE: 9/23/2025
PHASE: REBID & CONSTRUCTION	SCALE: AS NOTED

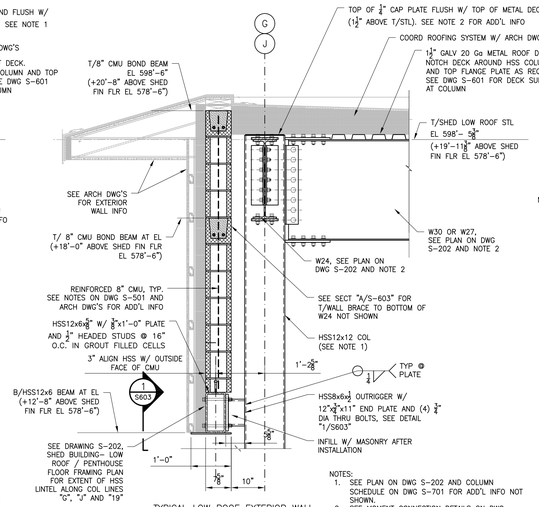
S-602



TYPICAL LOW ROOF EXTERIOR WALL
BETWEEN COLUMNS

NOTES:
1. SEE SECT "B/S-603" FOR TYPICAL LOW ROOF EXTERIOR WALL AT COLUMNS BEYOND.
2. ATTACH BENT PLATE TO CMU WALL W/(2) 3/4" DIA ADHESIVE ANCHORS AT 4" C/C CENTERED IN 0'-8" LONG BENT PLATE. INSTALL AT BOTTOM OF VERT SLOTTED HOLE IN BENT PL. TIGHTEN NUT FINGER TIGHT AND TACK WELD NUT TO PLATE.

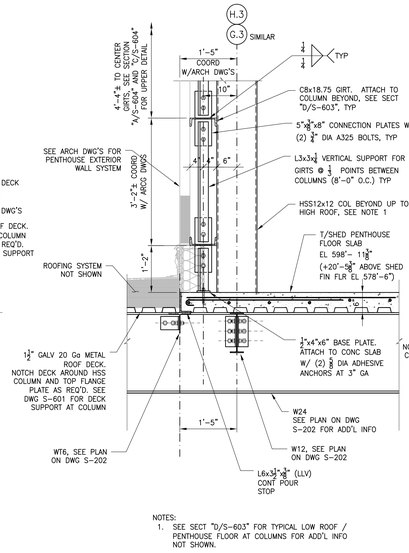
A S-603 SECTION – SHED BLDG
3/4"=1'-0"



TYPICAL LOW ROOF EXTERIOR WALL
AT COLUMNS

NOTES:
1. SEE PLAN ON DWG S-202 AND COLUMN SCHEDULE ON DWG S-701 FOR ADD'L INFO NOT SHOWN.
2. SEE MOMENT CONNECTION DETAILS ON DWG S-602 FOR ADD'L INFO NOT SHOWN.
3. SEE SECT "A/S-603" FOR TYPICAL LOW ROOF EXTERIOR WALL BETWEEN COLUMNS NOT SHOWN.

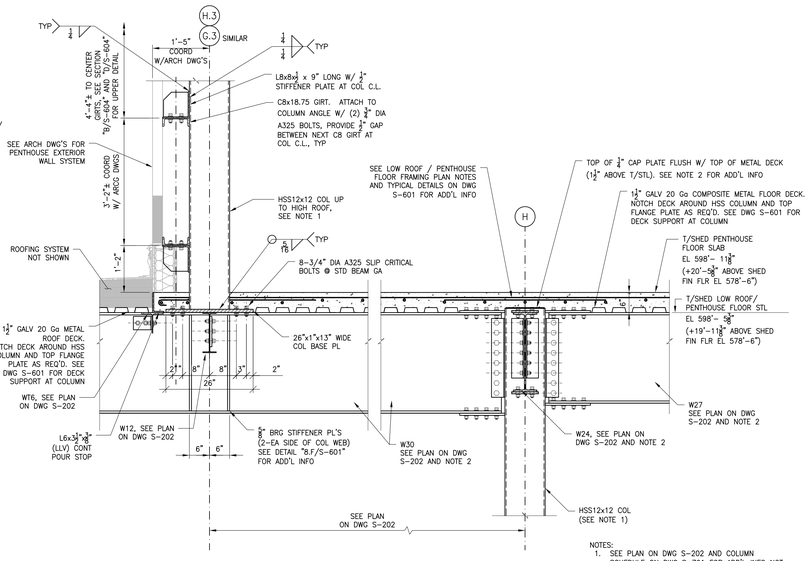
B S-603 SECTION – SHED BLDG
3/4"=1'-0"



NOTES:
1. SEE SECT "D/S-603" FOR TYPICAL LOW ROOF / PENTHOUSE FLOOR AT COLUMNS FOR ADD'L INFO NOT SHOWN.

TYPICAL LOW ROOF / PENTHOUSE FLOOR
BETWEEN COLUMNS

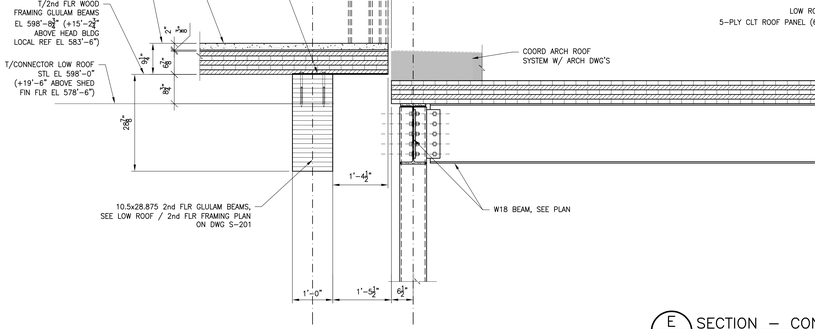
C S-603 SECTION – SHED BLDG
3/4"=1'-0"



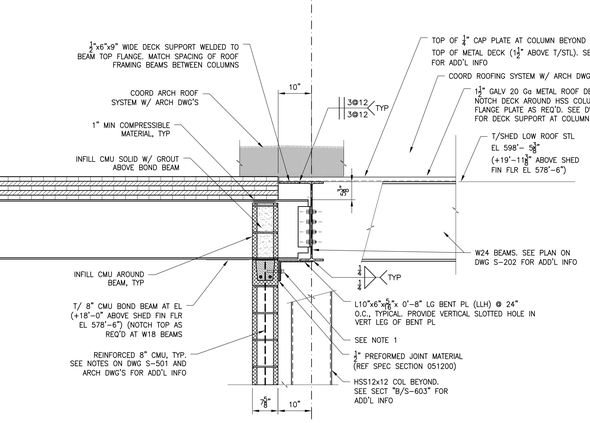
NOTES:
1. SEE PLAN ON DWG S-202 AND COLUMN SCHEDULE ON DWG S-701 FOR ADD'L INFO NOT SHOWN.
2. SEE MOMENT CONNECTION DETAILS ON DWG S-602 FOR ADD'L INFO NOT SHOWN.
3. SEE SECT "C/S-603" FOR TYPICAL LOW ROOF EXTERIOR WALL BETWEEN COLUMNS NOT SHOWN.

TYPICAL LOW ROOF / PENTHOUSE FLOOR
AT COLUMNS

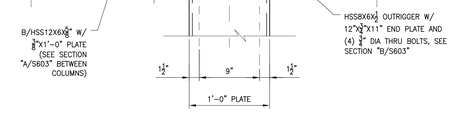
D S-603 SECTION – SHED BLDG
3/4"=1'-0"



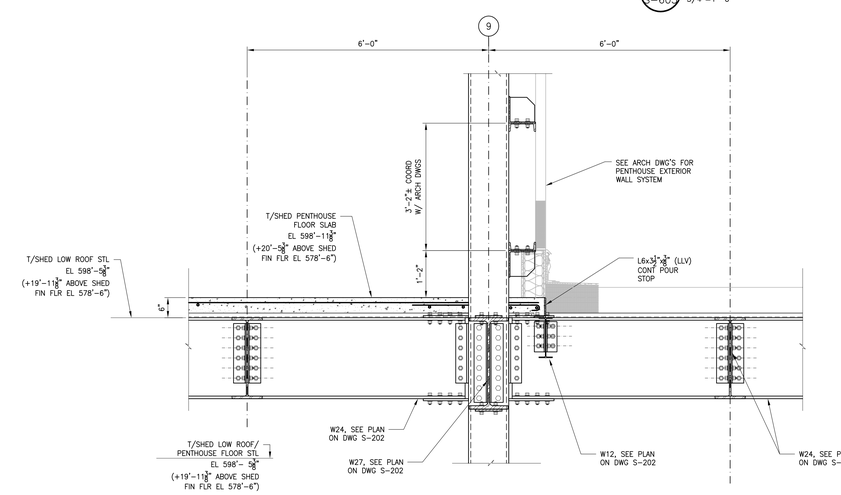
E S-603 SECTION – CONNECTING LINK
3/4"=1'-0"



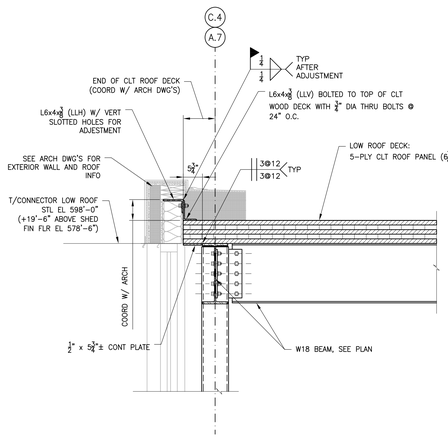
NOTES:
1. ATTACH BENT PLATE TO CMU WALL W/ 3/4" DIA ADHESIVE ANCHORS. INSTALL AT BOTTOM OF VERT SLOTTED HOLE IN BENT PL. TIGHTEN NUT FINGER TIGHT AND TACK WELD NUT TO PLATE.



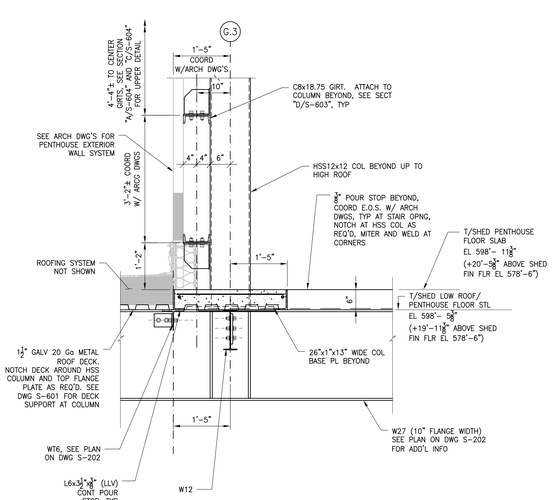
1 S603 DETAIL @ HSS LINTEL TO COL (ABOVE WINDOWS)
1 1/2"=1'-0"



F S-603 SECTION – SHED BLDG
3/4"=1'-0"



G S-603 SECTION – CONNECTING LINK
3/4"=1'-0"



H S-603 SECTION – SHED BLDG
3/4"=1'-0"

ONEIDA COUNTY NEW YORK 1798

MVCC
MOHAWK VALLEY COMMUNITY COLLEGE
1101 SHERMAN DRIVE
UTICA, NY 13501
(315) 792-5400

ARCHITECT:
MARCH ASSOCIATES ARCHITECTS & PLANNERS, PC
258 Genesee Street, Suite 300
Utica, New York 13501
315 733 3344

Mitchell Giurgola
Mitchell Giurgola Architects LLP
630 Ninth Avenue, Suite 711
New York, New York 10036
212 663 4000

STRUCTURAL ENGINEER:
Interactive Engineering Solutions, PC
1721 Black River Blvd, Suite L-1
Rome, NY 13440
315 339 7855

IE Solutions
Interactive Engineering Solutions P.C.
Certificate of Authorization No. 0922543
Expiration Date: 11/30/2027

MEP ENGINEER:
Towne Engineering
18 South Street
Utica, NY 13501
315 733 9000

SITE | CIVIL ENGINEER:
Appel Osborne Landscape Architecture
102 West Division Street, Suite 100
Syracuse, NY 13204
315 476 1022

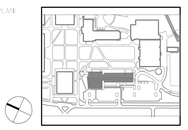
SEAL:

Douglas R. Cahill, PE
NYS Professional Engineer No. 61675
Expiration Date 3/31/2026

ISSUE/REVISION:		
NO.	DATE	COMMENTS
1	9/23/25	REBID & CONSTRUCTION

COPYRIGHT © 2018 MITCHELL GIURGOLA ARCHITECTS LLP
THESE DRAWINGS ARE THE PROPERTY OF THE ARCHITECT AND SHALL NOT BE REUSED IN WHOLE OR IN PART WITHOUT THE WRITTEN PERMISSION OF THE ARCHITECT. THE CONTRACTOR SHALL VERIFY AND BE RESPONSIBLE FOR ALL DIMENSIONS AND CONDITIONS ON THE JOB. THE ARCHITECT MUST BE NOTIFIED OF ANY VARIATIONS FROM THE DIMENSIONS AND CONDITIONS SHOWN BY THESE DRAWINGS BEFORE PROCEEDING WITH THE WORK.

KEY PLAN:



PLAN NORTH

PROJECT:

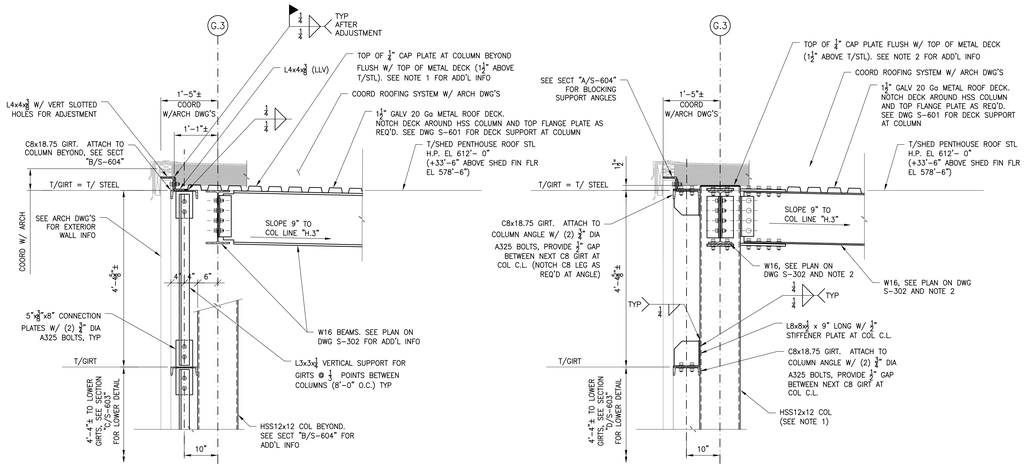
SCIENCE & TECHNOLOGY BUILDING

DRAWING TITLE:

SHED BUILDING – LOW ROOF, CONNECTING LINK ROOF & PENTHOUSE FRAMING SECTIONS

PROJECT NO: 23000	DATE: 9/23/2025
PHASE: REBID & CONSTRUCTION	SCALE: AS NOTED

S-603



NOTES:
1. SEE SECT "B/S-604" FOR TYPICAL HIGH ROOF EXTERIOR WALL AT COLUMNS BEYOND.

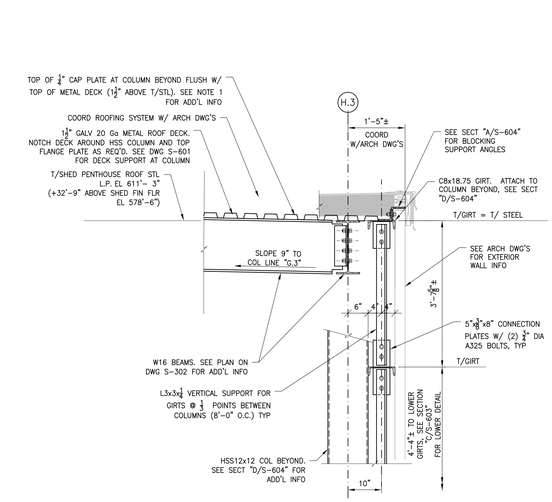
TYPICAL PENTHOUSE HIGH ROOF EXTERIOR WALL BETWEEN COLUMNS AT HIGH POINT

A S-604 SECTION – SHED BLDG 3/4"=1'-0"

NOTES:
1. SEE PLAN ON DWG S-302 AND COLUMN SCHEDULE ON DWG S-701 FOR ADD'L INFO NOT SHOWN.
2. SEE MOMENT CONNECTION DETAILS ON DWG S-602 FOR ADD'L INFO NOT SHOWN.
3. SEE SECT "A/S-604" FOR TYPICAL HIGH ROOF EXTERIOR WALL BETWEEN COLUMNS NOT SHOWN.

TYPICAL PENTHOUSE HIGH ROOF EXTERIOR WALL AT COLUMNS @ HIGH POINT

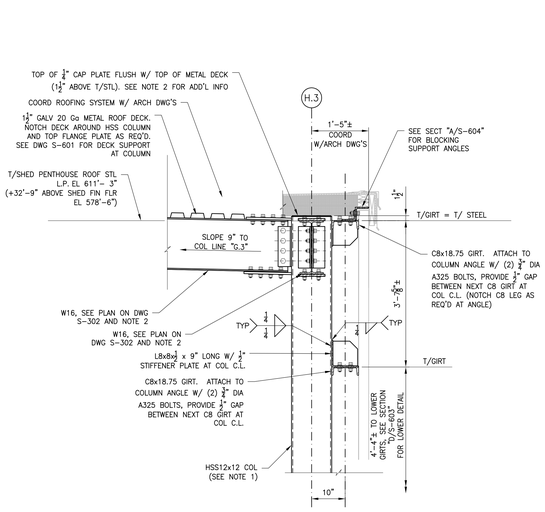
B S-604 SECTION – SHED BLDG 3/4"=1'-0"



NOTES:
1. SEE SECT "D/S-604" FOR TYPICAL LOW ROOF EXTERIOR WALL AT COLUMNS BEYOND.

TYPICAL PENTHOUSE HIGH ROOF EXTERIOR WALL BETWEEN COLUMNS AT LOW POINT

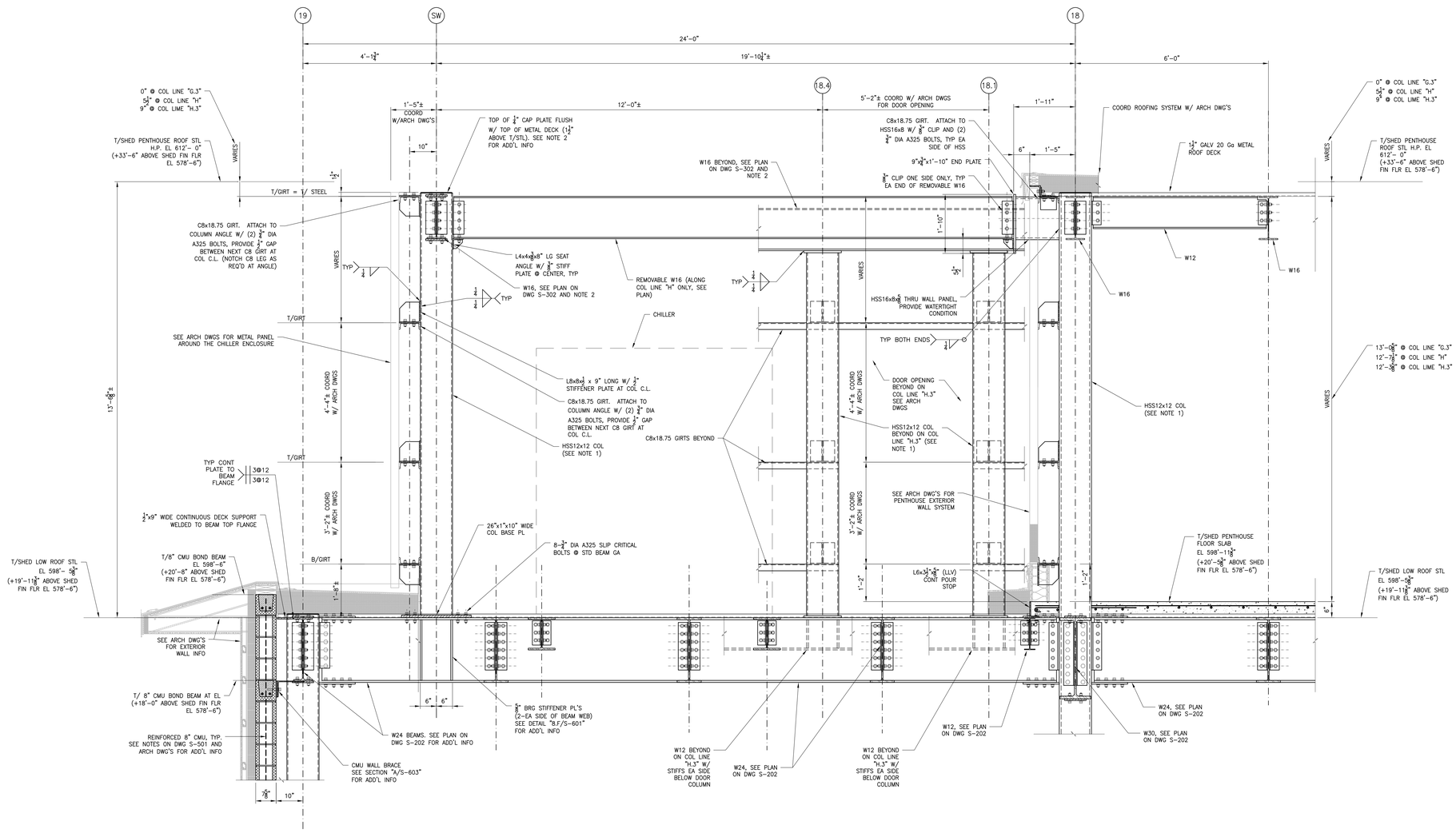
C S-604 SECTION – SHED BLDG 3/4"=1'-0"



NOTES:
1. SEE PLAN ON DWG S-302 AND COLUMN SCHEDULE ON DWG S-701 FOR ADD'L INFO NOT SHOWN.
2. SEE MOMENT CONNECTION DETAILS ON DWG S-602 FOR ADD'L INFO NOT SHOWN.
3. SEE SECT "C/S-604" FOR TYPICAL HIGH ROOF EXTERIOR WALL BETWEEN COLUMNS NOT SHOWN.

TYPICAL PENTHOUSE HIGH ROOF EXTERIOR WALL AT COLUMNS @ LOW POINT

D S-604 SECTION – SHED BLDG 3/4"=1'-0"



E S-604 SECTION – SHED BLDG AT COL LINE "H" 3/4"=1'-0"

NOTES:
1. SEE PLAN ON DWG S-302 AND COLUMN SCHEDULE ON DWG S-701 FOR ADD'L INFO NOT SHOWN.
2. SEE MOMENT CONNECTION DETAILS ON DWG S-602 FOR ADD'L INFO NOT SHOWN.
3. SEE SECT "A/S-604" FOR TYPICAL HIGH ROOF EXTERIOR WALL BETWEEN COLUMNS NOT SHOWN.
4. ALL EXPOSED CHILLER ENCLOSURE STEEL MEMBERS INCLUDING BEAMS, COLUMNS, GIRTS AND CONNECTIONS SHALL BE HOT-DIPPED GALVANIZED.
5. SECTION SIMILAR ALONG COL LINE "G.3" W/O DOOR OPENING.

ONEIDA COUNTY NEW YORK 1798

MVCC MOHAWK VALLEY COMMUNITY COLLEGE
1101 SHERMAN DRIVE
UTICA, NY 13501
(315) 792-5400

ARCHITECT:
MARCH ASSOCIATES ARCHITECTS & PLANNERS, PC
258 Genesee Street, Suite 300
Utica, New York 13501
315 733 3344

Mitchell Giurgola
Mitchell Giurgola Architects LLP
630 Ninth Avenue, Suite 711
New York, New York 10036
212 663 4000

STRUCTURAL ENGINEER:
Interactive Engineering Solutions, PC
1721 Black River Blvd, Suite L-1
Rome, NY 13440
315 339 7855

IE Solutions
Interactive Engineering Solutions, PC
Interactive Engineering Solutions P.C.
Certificate of Authorization No. 0922543
Expiration Date: 11/30/2027

MEP ENGINEER:
Towne Engineering
18 South Street
Utica, NY 13501
315 733 9000

SITE | CIVIL ENGINEER:
Appel Osborne Landscape Architecture
102 West Division Street, Suite 100
Syracuse, NY 13204
315 476 1022

SEAL:

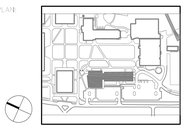
Douglas R. Cahill, PE
NYS Professional Engineer No. 61675
Expiration Date 3/31/2026

ISSUE/REVISION:

NO.	DATE	COMMENTS
1	9/23/25	REBID & CONSTRUCTION

COPYRIGHT © 2018 MITCHELL GIURGOLA ARCHITECTS LLP
ALL DRAWINGS, THE DESIGNS CONTAINED THEREIN, AS CREATED AND VERIFIED BY THE OWNER'S CONSULTANTS, ARE TO BE USED ONLY WITH THE WORK.

KEY PLAN:



PROJECT:

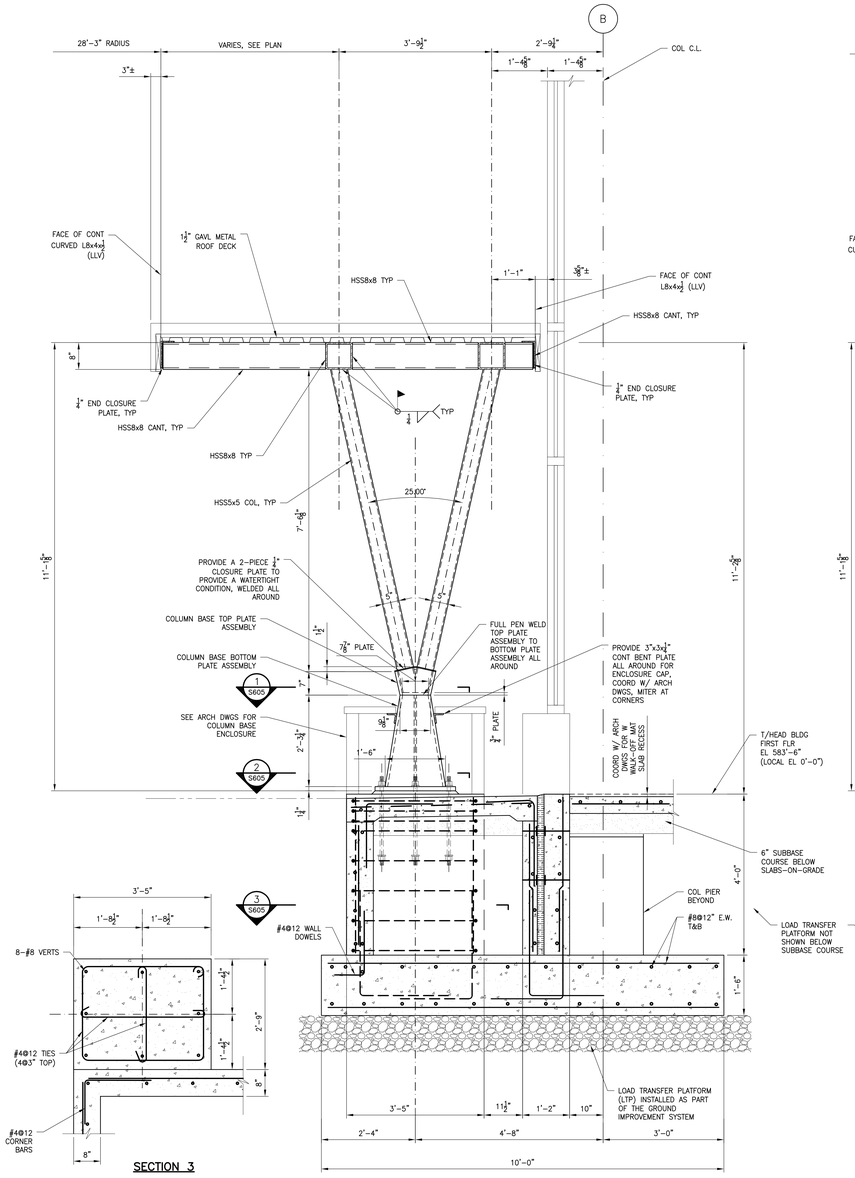
SCIENCE & TECHNOLOGY BUILDING

DRAWING TITLE:

SHED BUILDING – HIGH ROOF FRAMING SECTIONS

PROJECT NO: 23000 | DATE: 9/23/2025
PHASE: REBID & CONSTRUCTION | SCALE: AS NOTED

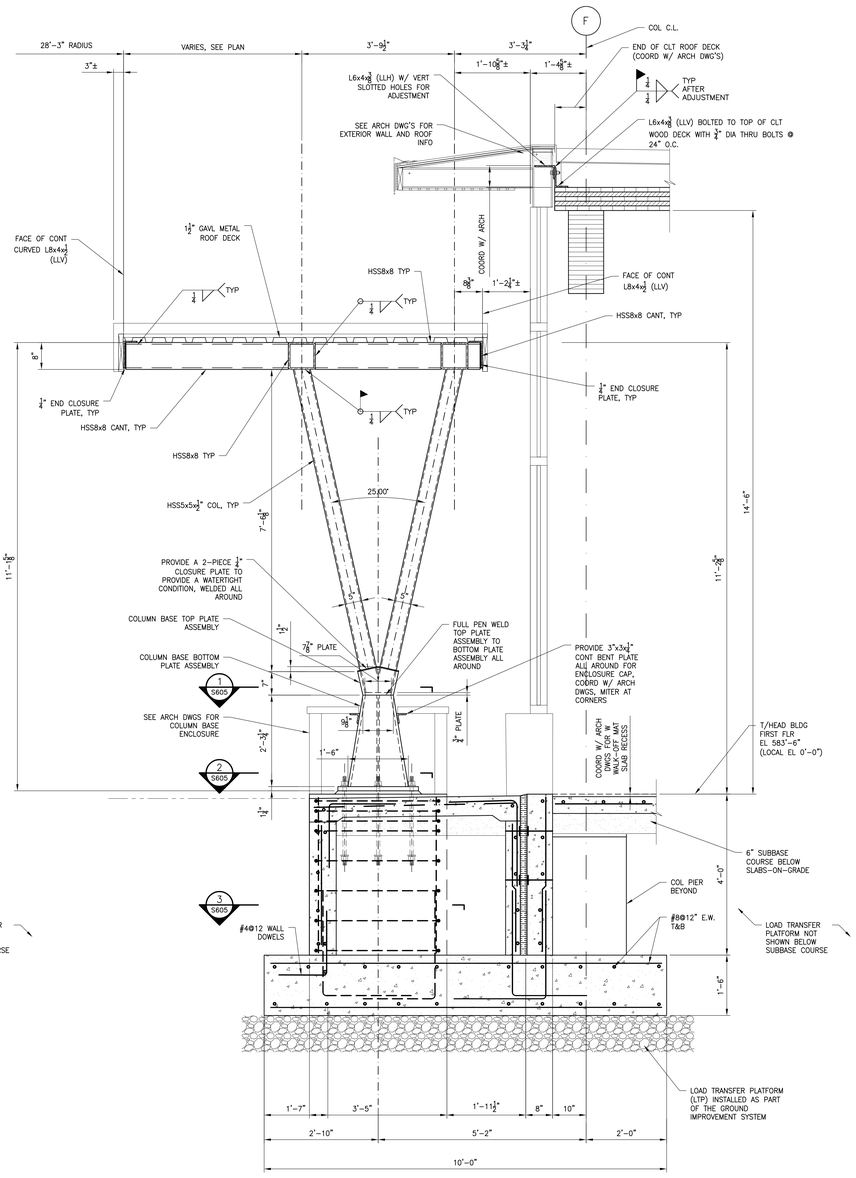
S-604



SECTION 3

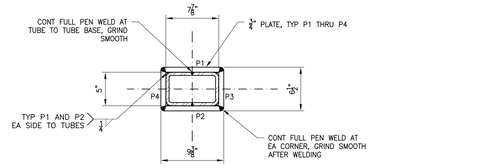
A S-605 SECTION – MAIN CANOPY
3/4"=1'-0"

NOTE:
1. SEE DRAWING S-402 FOR ADDITIONAL REINFORCEMENT AND DIMENSIONAL INFO NOT SHOWN AT FOUNDATION LEVEL.

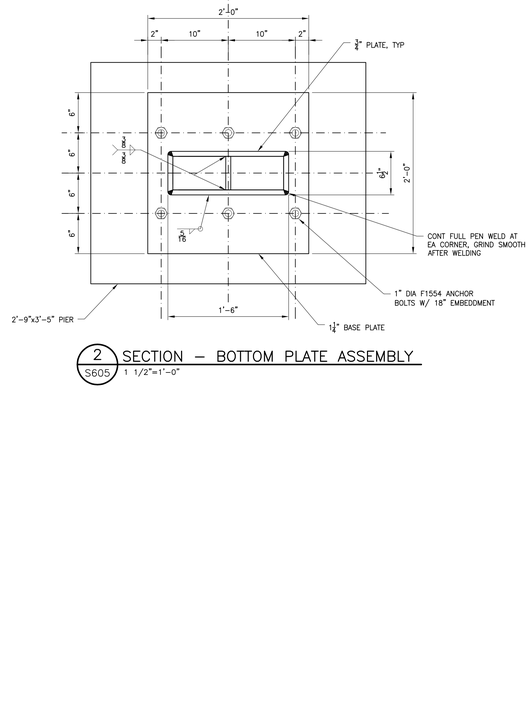


B S-605 SECTION – REAR CANOPY
3/4"=1'-0"

NOTE:
1. SEE DRAWING S-402 FOR ADDITIONAL REINFORCEMENT AND DIMENSIONAL INFO NOT SHOWN AT FOUNDATION LEVEL.



1 S605 SECTION – TOP PLATE ASSEMBLY
1 1/2"=1'-0"



2 S605 SECTION – BOTTOM PLATE ASSEMBLY
1 1/2"=1'-0"

ONEIDA COUNTY NEW YORK 1798

MVCC
MOHAWK VALLEY COMMUNITY COLLEGE
1101 SHERMAN DRIVE
UTICA, NY 13501
(315) 792-5400

ARCHITECT:
MARCH ASSOCIATES ARCHITECTS & PLANNERS, PC
258 Genesee Street, Suite 300
Utica, New York 13501
315 733 3344

Mitchell Giurgola
Mitchell Giurgola Architects LLP
630 Ninth Avenue, Suite 711
New York, New York 10036
212 663 4000

STRUCTURAL ENGINEER:
Interactive Engineering Solutions, PC
1721 Black River Blvd, Suite L-1
Rome, NY 13440
315 339 7855
IE Solutions
Interactive Engineering Solutions P.C.
Certificate of Authorization No. 0922543
Expiration Date: 11/30/2027

MEP ENGINEER:
Towne Engineering
18 South Street
Utica, NY 13501
315 733 9000

SITE | CIVIL ENGINEER:
Appel Osborne Landscape Architecture
102 West Division Street, Suite 100
Syracuse, NY 13204
315 476 1022

SEAL:

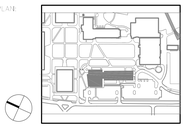
Douglas R. Cahill, PE
NYS Professional Engineer No. 61675
Expiration Date 3/31/2026

REVISIONS:

NO.	DATE	COMMENTS
1	9/23/25	REBID & CONSTRUCTION

COPYRIGHT © 2018 MITCHELL GIURGOLA ARCHITECTS LLP
ALL DIMENSIONS AND EXISTING CONDITIONS SHALL BE CHECKED AND VERIFIED BY THE CONTRACTOR BEFORE PROCEEDING WITH THE WORK.

KEY PLAN:

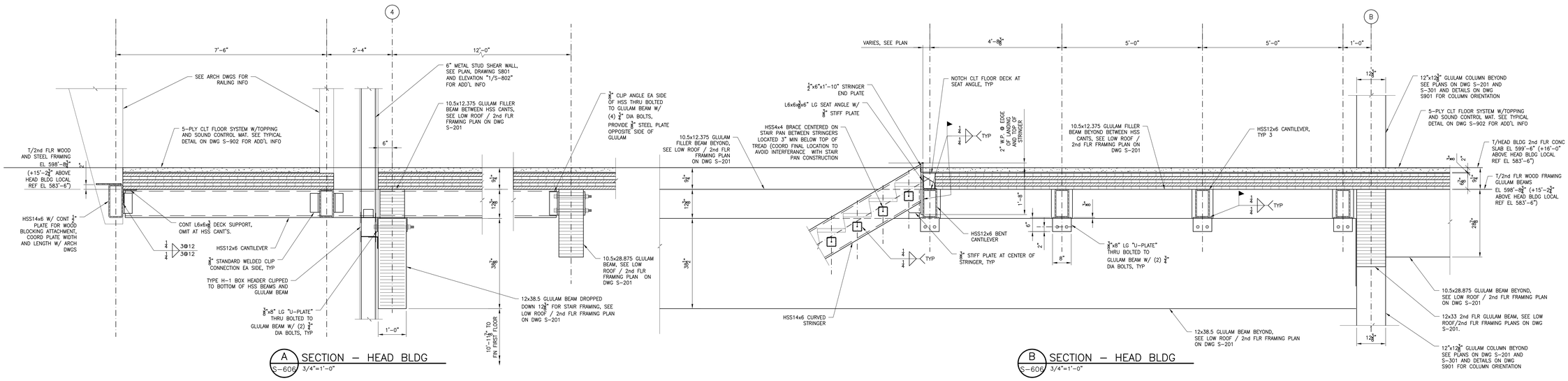


PROJECT:
SCIENCE & TECHNOLOGY BUILDING

DRAWING TITLE:
HEAD BUILDING – CANOPY SECTIONS AND DETAILS

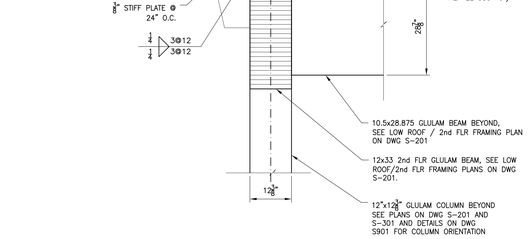
PROJECT NO: 23000 | DATE: 9/23/2025
PHASE: REBID & CONSTRUCTION | SCALE: AS NOTED

S-605

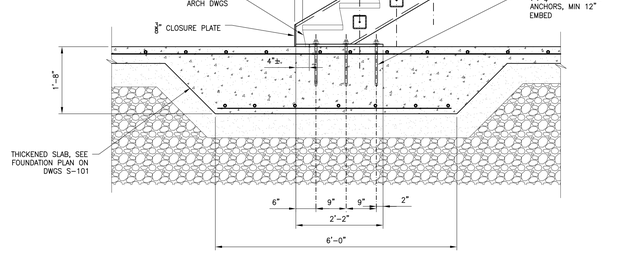


A S-606 SECTION – HEAD BLDG
3/4"=1'-0"

B S-606 SECTION – HEAD BLDG
3/4"=1'-0"



C S-606 SECTION – HEAD BLDG
3/4"=1'-0"



D S-606 SECTION – HEAD BLDG
3/4"=1'-0"

ONEIDA COUNTY NEW YORK 1798

MVCC
MOHAWK VALLEY COMMUNITY COLLEGE
1101 SHERMAN DRIVE
UTICA, NY 13501
(315) 792-5400

ARCHITECT:
MARCH ASSOCIATES ARCHITECTS & PLANNERS, PC
258 Genesee Street, Suite 300
Utica, New York 13501
315 733 3344

Mitchell Giurgola
Mitchell Giurgola Architects LLP
630 Ninth Avenue, Suite 711
New York, New York 10036
212 663 4000

STRUCTURAL ENGINEER:
Interactive Engineering Solutions, PC
1721 Black River Blvd, Suite L-1
Rome, NY 13440
315 339 7855
IE Solutions
Interactive Engineering Solutions P.C.
Certificate of Authorization No. 0022543
Expiration Date: 11/30/2027

MEP ENGINEER:
Towne Engineering
18 South Street
Utica, NY 13501
315 733 9000

SITE | CIVIL ENGINEER:
Appel Osborne Landscape Architecture
102 West Division Street, Suite 100
Syracuse, NY 13204
315 476 1022

SEAL:

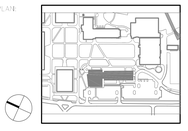
Douglas R. Cahill, PE
NYS Professional Engineer No. 61675
Expiration Date 3/31/2026

ISSUE/REVISION:

NO	DATE	COMMENTS
1	9/23/25	REBID & CONSTRUCTION

COPYRIGHT © 2018 MITCHELL GIURGOLA ARCHITECTS LLP
ALL DRAWINGS ARE THE PROPERTY OF THE ARCHITECT AND SHALL NOT BE REUSED, AND VERIFIED BY THE CONTRACTOR BEFORE PROCEEDING WITH THE WORK.

KEY PLAN:



PROJECT:

SCIENCE & TECHNOLOGY BUILDING

DRAWING TITLE:

HEAD BUILDING – MAIN LOBBY STAIR SECTIONS AND DETAILS

PROJECT NO: 23000 | DATE: 9/23/2025
PHASE: REBID & CONSTRUCTION | SCALE: AS NOTED

S-606

COLUMN SCHEDULE – SHED BUILDING

COLUMN MARK / ELEVATION	7.1	8		9				10				11				12				13				14				15				16				17				18				18.1	18.4	SW (SCREEN WALL)			19				X1 THRU X7
	A.7	H.2	C.4	G	H	J	G	G.3	H	H.3	J	G	G.3	H	H.3	J	G	G.3	H	H.3	J	G	G.3	H	H.3	J	G	G.3	H	H.3	J	G	G.3	H	H.3	J	G	G.3	H	H.3	J	G	G.3	H	H.3	J	H.3	H.3	G.3	H	H.3	G	H	H.4	J	
BASE PL TYPE	B	B	B	D	A	D	C		A		C	C		A		C	C		A		C	C		A		C	C		A		C	C		A		C	C		A		C							D	C	D	D	B
BASE PL-SIZE	16"x1'-4"	16"x1'-4"	16"x1'-4"	18"x1'-6"	18"x1'-6"	18"x1'-6"	18"x1'-6"	SEE SECTIONS	18"x1'-6"	SEE SECTIONS	18"x1'-6"	18"x1'-6"	SEE SECTIONS	18"x1'-6"	SEE SECTIONS	18"x1'-6"	18"x1'-6"	SEE SECTIONS	18"x1'-6"	SEE SECTIONS	18"x1'-6"	18"x1'-6"	SEE SECTIONS	18"x1'-6"	SEE SECTIONS	18"x1'-6"	18"x1'-6"	SEE SECTIONS	18"x1'-6"	SEE SECTIONS	18"x1'-6"	18"x1'-6"	SEE SECTIONS	18"x1'-6"	SEE SECTIONS	18"x1'-6"	18"x1'-6"	SEE SECTIONS	18"x1'-6"	SEE SECTIONS	18"x1'-6"	SEE SECTIONS	SEE SECTIONS	SEE SECTIONS	SEE SECTIONS	SEE SECTIONS	SEE SECTIONS	18"x1'-6"	18"x1'-6"	18"x1'-6"	16"x1'-4"
COLUMN SPREAD FOOTING LOADS: (SEE NOTE 4)	27k	30k	27k	45k	50k	55k	60k	---	103k	---	63k	75k	---	130k	---	70k	75k	---	130k	---	70k	75k	---	130k	---	70k	75k	---	130k	---	70k	75k	---	130k	---	70k	75k	---	130k	---	70k	75k	---	130k	---	70k	---	---	---	---	---	40k	60k	40k	40k	---
UN-FACTORED DEAD LOADS (KIPS)	18k	35k	18k	35k	80k	40k	60k	---	132k	---	42k	85k	---	190k	---	50k	85k	---	190k	---	50k	85k	---	190k	---	50k	85k	---	190k	---	50k	85k	---	190k	---	50k	85k	---	190k	---	50k	85k	---	190k	---	50k	---	---	---	---	---	20k	40k	20k	20k	---
UN-FACTORED LIVE LOADS+SNOW LOADS (KIPS)	45k	65k	45k	80k	130k	95k	120k	---	235k	---	105k	160k	---	320k	---	120k	160k	---	320k	---	120k	160k	---	320k	---	120k	160k	---	320k	---	120k	160k	---	320k	---	120k	160k	---	320k	---	120k	160k	---	320k	---	120k	---	---	---	---	---	60k	100k	60k	60k	---
TOTAL UN-FACTORED LOADS (KIPS)																																																					

SEE TYPICAL MOMENT CONNECTION DETAILS ON DWG S602 FOR CAP PLATE AND TOP AND BOTTOM FLANGE PLATES, TYP ALL COLUMNS

9" TO T/ STL COL LINE H.3

0'-9" TO T/ STL

SHED HIGH ROOF T/ STL H.P. ALONG COL LINE G.3 EL 612'-0" (+33'-6")

T/SHED PENTHOUSE FLOOR SLAB EL 598'-11⅛"

SHED LOW ROOF / PENTHOUSE FLOOR T/ STL EL 598'-5⅛" (+19'-11⅛")

CONNECTOR LINK ROOF T/ STL EL 598'-0" (+19'-6")

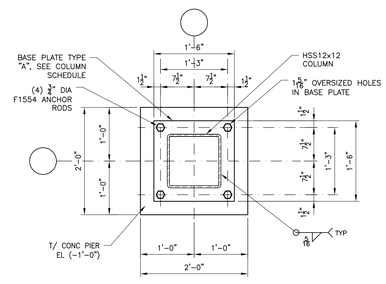
FIN HEAD FIRST FLOOR EL 583'-6 (LOCAL 0'-0")

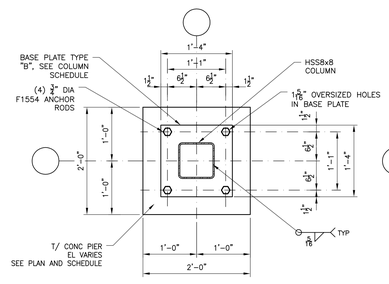
FIN SHED FIRST FLOOR EL 578'-6 (LOCAL 0'-0")

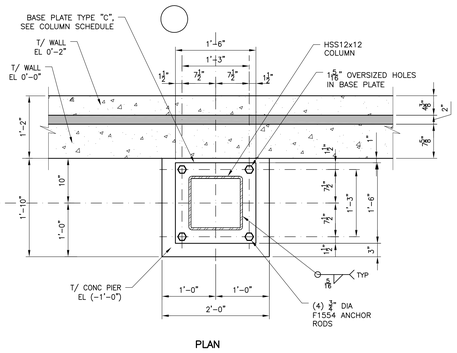
13'-0" 13'-0" 33'-6" 19'-6" 19'-11⅛" 14'-6" 5'-0" 4'-1" 3'-1½" 1'-7½" 1'-0"

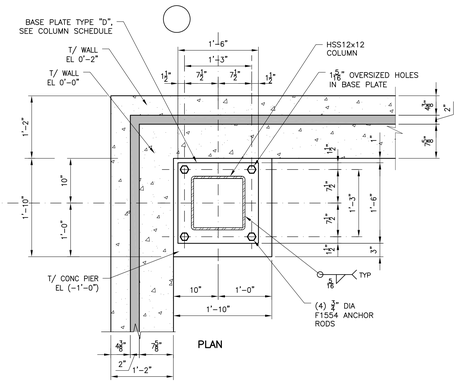
1" CAP PLATE 8'-0" 10"

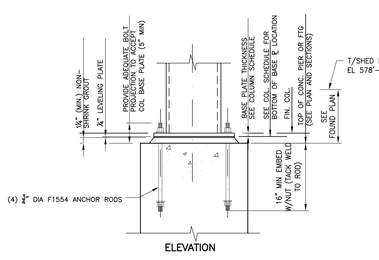
NOTES:
1. DIMENSIONS SHOWN ARE TO BOTTOM OF COLUMN BASE PLATES.
2. ALL BASE PLATE DIMENSIONS ARE SHOWN IN INCHES.
3. COORDINATE TOP OF COLUMNS W/TOP OF STEEL SHOWN ON PLANS AND SECTIONS.
4. COLUMN SPREAD FOOTING LOADS ARE PROVIDED FOR USE BY THE SPECIALTY CONTRACTOR'S GROUND IMPROVEMENT DELEGATED DESIGN PROFESSIONAL ENGINEER. ALL LOADS ARE UN-FACTORED MAXIMUM DESIGN LOADS.



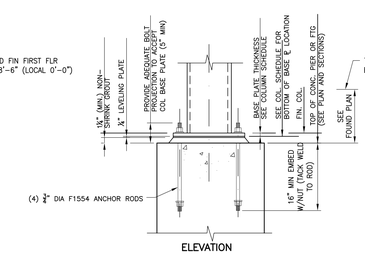




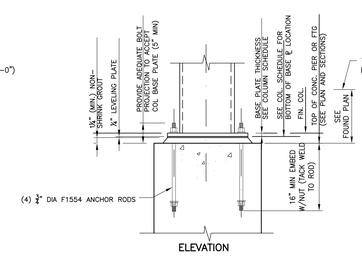




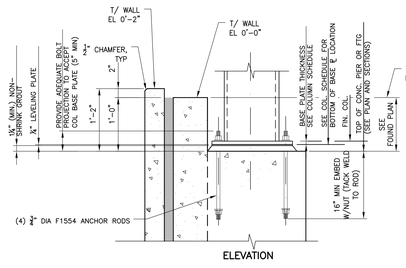
1 S-701 DETAIL TYPE "A" BASE PLATE 1"=1'-0"



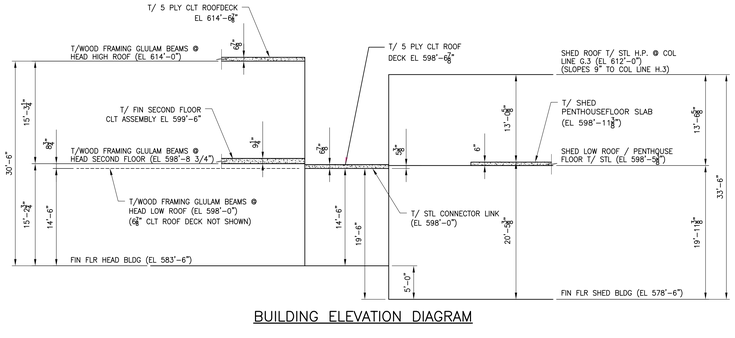
2 S-701 DETAIL TYPE "B" BASE PLATE 1"=1'-0"



3 S-701 DETAIL TYPE "C" BASE PLATE 1"=1'-0"



3 S-701 DETAIL TYPE "D" BASE PLATE 1"=1'-0"



BUILDING ELEVATION DIAGRAM

ONEIDA COUNTY NEW YORK 1798

MVCC MOHAWK VALLEY COMMUNITY COLLEGE
1101 SHERMAN DRIVE
UTICA, NY 13501
(315) 792-5400

ARCHITECT:
MARCH ASSOCIATES ARCHITECTS & PLANNERS, PC
258 Genesee Street, Suite 300
Utica, New York 13501
315 733 3344

Mitchell Giurgola
Mitchell Giurgola Architects LLP
630 Ninth Avenue, Suite 711
New York, New York 10036
212 663 4000

STRUCTURAL ENGINEER:
Interactive Engineering Solutions, PC
1721 Black River Blvd, Suite L-1
Rome, NY 13440
315 339 7855
IE Solutions
Interactive Engineering Solutions P.C.
Certificate of Authorization No. 0922543
Expiration Date: 11/30/2027

MEP ENGINEER:
Towne Engineering
18 South Street
Utica, NY 13501
315 733 9000

SITE | CIVIL ENGINEER:
Appel Osborne Landscape Architecture
102 West Division Street, Suite 100
Syracuse, NY 13204
315 476 1022

SEAL:

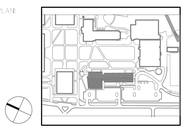
Douglas R. Cahill, PE
NYS Professional Engineer No. 61675
Expiration Date 3/31/2026

ISSUE/REVISION:

NO.	DATE	COMMENTS
1	9/23/25	REBID & CONSTRUCTION

COPYRIGHT © 2016 MITCHELL GIURGOLA ARCHITECTS LLP
THE DRAWINGS AND DESIGNS CONTAINED HEREIN ARE AND SHALL REMAIN THE PROPERTY OF THE CONTRACTOR BEFORE, DURING AND AFTER THE WORK.

KEY PLAN:



PLAN NORTH

PROJECT:

SCIENCE & TECHNOLOGY BUILDING

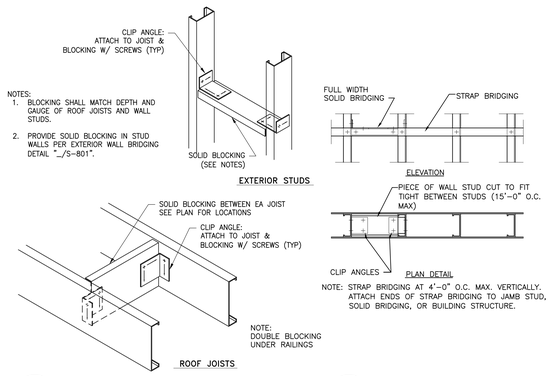
DRAWING TITLE:

SHED BUILDING – STEEL COLUMN SCHEDULE AND DETAILS

PROJECT NO: 23000 | DATE: 9/23/2025

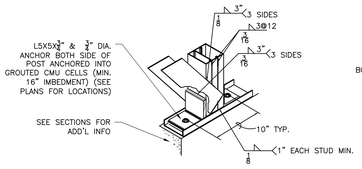
PHASE: REBID & CONSTRUCTION | SCALE: AS NOTED

S-701

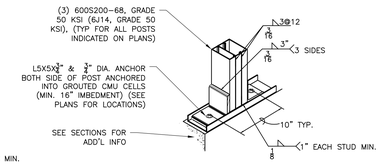


1 S-801 DETAIL – SOLID BLOCKING
NO SCALE

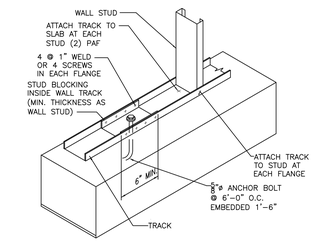
2 S-801 EXTERIOR WALL BRIDGING
NO SCALE



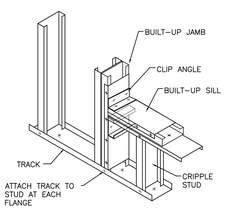
3 S-801 BRACING BASE DETAIL
NO SCALE



4 S-801 POST BASE DETAIL
NO SCALE

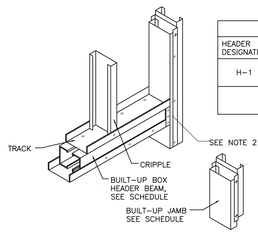


5 S-801 WALL ATTACH. TO TOP OF FOUNDATION WALL
NO SCALE



NOTE: FASTEN BUILT-UP MEMBERS TOGETHER AT 12" O.C. MAX.

6 S-801 OPNG BUILT-UP SILL
NO SCALE



HEADER DESIGNATION	HEADER BEAM	JAMB ASSEMBLY
H-1	6x8 (2) 800S200-68, GRADE 50 + (2) 600T200-54, GRADE 50	POST (DETAIL "4/S-801")

NOTES:
1. PROVIDE WEB STIFFENERS AS REQ'D. IN BOX BEAM HEADERS AT EACH SUPPORT AND DIRECTLY UNDER ANY CONCENTRATED LOADS.
2. ATTACH BUILT-UP BOX HEADER TO BUILT-UP JAMS WITH PRE-MANUFACTURED CLIPS WITH A MINIMUM LOAD CARRYING CAPACITY OF 5k (AS MANUFACTURED BY THE STEEL NETWORK INC, "STIFFCLIP HE-68 MIL, 50 ksi", MINIMUM THICKNESS=68 MILS (14 GA), OR APPROVED EQUAL).
3. FASTEN BUILT-UP MEMBERS TOGETHER AT 12" O.C. MAX.

7 S-801 OPENING-HEAD ASSEMBLY
NO SCALE

COLD-FORMED METAL FRAMING (CFS) GENERAL NOTES:

1. COLD-FORMED METAL FRAMING SHALL COMPLY WITH THE STANDARD AMERICAN IRON AND STEEL INSTITUTE (AISI).
2. THE INFORMATION SHOWN ON THE STRUCTURAL AND ARCHITECTURAL DRAWINGS IS INTENDED TO REPRESENT TYPICAL DETAILS, INCLUDING THE MINIMUM MEMBERS SIZES AND GAUGE REQUIREMENTS FOR THE CFS MEMBERS. THE MORE STRINGENT OF THE REQUIREMENTS FROM THE DELEGATED STRUCTURAL ENGINEERING PERFORMANCE DESIGN CALCULATIONS, THE ASSOCIATED ENGINEERED SHOP DRAWING DETAILS (INCLUDING, BUT NOT LIMITED TO HEADERS, BUILT-UP POSTS, SILLS, DOOR JAMBS, ETC) AND THE MINIMUM REQUIREMENTS SHOWN WITHIN THE CONTRACT DOCUMENTS SHALL APPLY.
3. PERFORMANCE REQUIREMENTS – NON-LOAD BEARING CFS FRAMING
   a. DELEGATED DESIGN AND DESIGNER QUALIFICATIONS: ENGAGE A QUALIFIED PROFESSIONAL STRUCTURAL ENGINEER EXPERIENCED IN THE DESIGN OF THIS WORK AND WHO IS LICENSED IN THE STATE OF NEW YORK TO DESIGN THE FRAMING SYSTEM AND TO PREPARE SIGNED AND SEALED CALCULATIONS AND SHOP DRAWINGS FOR THE COLD-FORMED STEEL FRAMING. THE CONTRACTOR SHALL SUBMIT THESE DOCUMENTS FOR REVIEW.
   b. DESIGN AND PROVIDE COLD-FORMED STEEL FRAMING CAPABLE OF WITHSTANDING DESIGN LOADS WITHIN LIMITS AND UNDER CONDITIONS INDICATED.
   c. REFER TO SPECIFICATION SECTION 05 40 00 "COLD-FORMED METAL FRAMING" FOR ADDITIONAL INFORMATION.
4. MANUFACTURER: MARINO-WARE, DIETRICH OR APPROVED EQUAL.
5. MATERIALS AND FINISH (MINIMUM):
   a. THE MINIMUM MEMBER SIZES AND GAUGE REQUIREMENTS FOR ALL METAL CFS EXTERIOR NON-LOAD BEARING WALL STUDS SHALL BE AS FOLLOWS. REFER TO ARCH DWGS FOR LOCATIONS OF EACH:
      a.1. 6" COLD FORMED STEEL (CFS), 16 GA W/ 2" FLANGE, FY = 50 KSI, SUCH AS MARINO-WARE METAL FRAMING 6J16 (600S200-54) FOR 6" STUDS, UNLESS OTHERWISE NOTED, SPECIFIED OR REQUIRED BY DELEGATED STRUCTURAL ENGINEERING PERFORMANCE DESIGN.
   b. PROVIDE GALVANIZED FINISH TO ALL METAL FRAMING COMPONENTS COMPLYING WITH ASTM A525 FOR MINIMUM G90 COATING. USE GALVANIZED REPAIR TOUCH-UP PAINT IN THE FIELD. INSTALL UN-CUT ENDS OF STUDS IN BOTTOM TRACK.
6. THE SPECIFIC USE OF WELDING, SCREWS, AND / OR PAF'S ARE AT THE CONTRACTOR'S OPTION AND SHALL BE AS REQUIRED BY THE DELEGATED STRUCTURAL ENGINEERING PERFORMANCE DESIGN CALCULATIONS FOR THE CFS FRAMING SYSTEM AND THE ASSOCIATED ENGINEERED SHOP DRAWING DETAILS AND THEIR CONNECTIONS.
   a. IF WELDING IS TO BE USED, WELDING TO BE PERFORMED BY AWS CERTIFIED WELDER. USE 0.035 FLUX-CORE WIRE USING A MIG WELDER OR AN EQUIVALENT SUBSTITUTE.
   b. IF WELDING IS TO BE USED, WELD SIZE IS EQUAL TO OR GREATER THAN THE THICKNESS OF THE THINNEST CONNECTED MEMBER, UNLESS OTHERWISE NOTED OR REQUIRED BY DESIGN.

ONEIDA COUNTY NEW YORK 1798

MVCC
MOHAWK VALLEY COMMUNITY COLLEGE
1101 SHERMAN DRIVE
UTICA, NY 13501
(315) 792-5400

ARCHITECT:
MARCH ASSOCIATES ARCHITECTS & PLANNERS, PC
258 Genesee Street, Suite 300
Utica, New York 13501
315 733 3344

Mitchell Giurgola
Mitchell Giurgola Architects LLP
630 Ninth Avenue, Suite 711
New York, New York 10036
212 663 4000

STRUCTURAL ENGINEER:
Interactive Engineering Solutions, PC
1721 Black River Blvd, Suite L-1
Rome, NY 13440
315 339 7855
IE Solutions
Interactive Engineering Solutions P.C.
Certificate of Authorization No. 0022543
Expiration Date: 11/30/2027

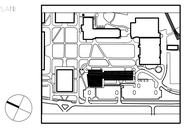
MEP ENGINEER:
Towne Engineering
18 South Street
Utica, NY 13501
315 733 9000

SITE | CIVIL ENGINEER:
Appel Osborne Landscape Architecture
102 West Division Street, Suite 100
Syracuse, NY 13204
315 476 1022

SEAL:
STATE OF NEW YORK DOUGLAS R. CAHILL 061675 LICENSED PROFESSIONAL ENGINEER
Douglas R. Cahill, PE
NYS Professional Engineer No. 61675
Expiration Date 3/31/2026

ISSUE/REVISION		
NO	DATE	COMMENTS
1	9/23/25	REBID & CONSTRUCTION

COPYRIGHT © 2018 MITCHELL GIURGOLA ARCHITECTS LLP
ALL DIMENSIONS ARE TO BE VERIFIED IN THE FIELD BY THE CONTRACTOR BEFORE PROCEEDING WITH THE WORK.

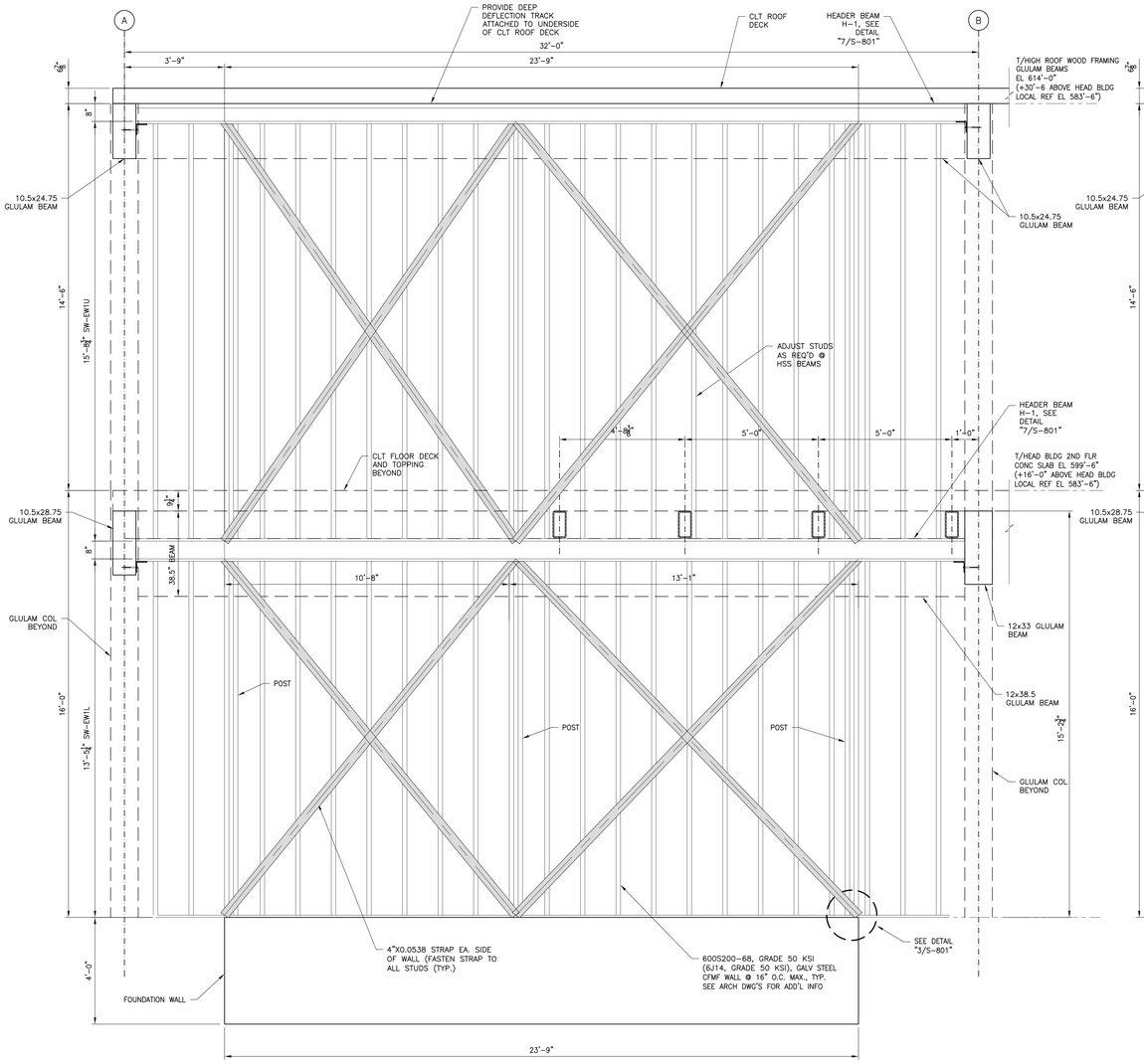
KEY PLAN:


PROJECT:
SCIENCE & TECHNOLOGY BUILDING

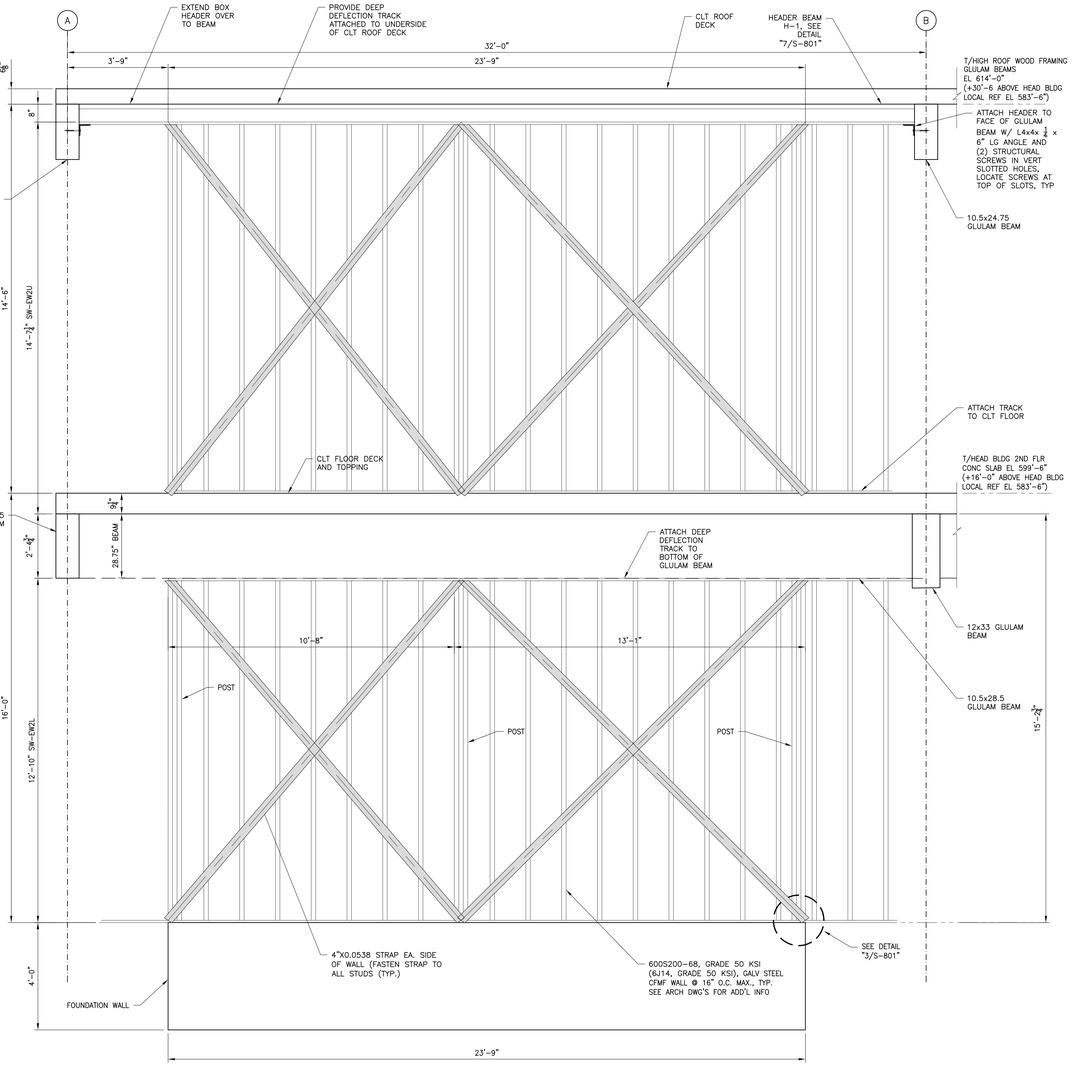
DRAWING TITLE:
HEAD BUILDING – CFMF DETAILS AND NOTES

PROJECT NO: 23000	DATE: 9/23/2025
PHASE: REBID & CONSTRUCTION	SCALE: AS NOTED

S-801



1 S-802 SHEAR WALL ELEVATION – SW-EW1L AND SW-EW1U
NO SCALE



2 S-802 SHEAR WALL ELEVATION – SW-EW2L AND SW-EW2U
NO SCALE

SHEAR WALL ELEVATION NOTES:

1. REFER TO DWG S-801 FOR COLD-FORMED METAL FRAMING (CFMS) TYPICAL DETAILS AND GENERAL NOTES.
2. CONNECTION OF STRAP BRACING AT EACH END SHALL BE DESIGNED FOR AN UN-FACTORED AXIAL TENSION LOAD.
3. SOLID BLOCK / WALL BRIDGING NOT SHOWN IN ALL ELEVATIONS. SEE DWG S-801 FOR ADD'L INFO.

ONEIDA COUNTY NEW YORK 1798

MVCC
MOHAWK VALLEY COMMUNITY COLLEGE

1101 SHERMAN DRIVE
UTICA, NY 13501
(315) 792-5400

ARCHITECT:

MARCH ASSOCIATES ARCHITECTS & PLANNERS, PC
258 Genesee Street, Suite 300
Utica, New York 13501
315 733 3344

Mitchell Giurgola
Mitchell Giurgola Architects LLP
630 Ninth Avenue, Suite 711
New York, New York 10036
212 663 4000

STRUCTURAL ENGINEER:
Interactive Engineering Solutions, PC
1721 Black River Blvd, Suite L-1
Rome, NY 13440
315 339 7855

IE Solutions
Interactive Engineering Solutions P.C.
Certificate of Authorization No. 0022543
Expiration Date: 11/30/2027

MEP ENGINEER:
Towne Engineering
18 South Street
Utica, NY 13501
315 733 9000

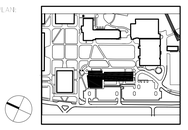
SITE | CIVIL ENGINEER:
Appel Osborne Landscape Architecture
102 West Division Street, Suite 100
Syracuse, NY 13204
315 476 1022

SEAL:
STATE OF NEW YORK DOUGLAS R. CAHILL 61675 LICENSED PROFESSIONAL ENGINEER
Douglas R. Cahill, PE
NYS Professional Engineer No. 61675
Expiration Date 3/31/2026

ISSUE/REVISION:		
NO.	DATE	COMMENTS
1	9/23/25	REBID & CONSTRUCTION

COPYRIGHT © 2018 MITCHELL GIURGOLA ARCHITECTS LLP
ALL RIGHTS RESERVED. THIS DRAWING IS AN INSTRUMENT OF SERVICE PREPARED BY AND IS THE PROPERTY OF MITCHELL GIURGOLA ARCHITECTS LLP. IT IS NOT TO BE USED IN WHOLE OR IN PART FOR ANY PURPOSE OR PROJECT WITHOUT THE WRITTEN AUTHORIZATION OF MITCHELL GIURGOLA ARCHITECTS LLP. ALL COMMON LAW, STATUTORY AND OTHER RESERVED RIGHTS, INCLUDING COPYRIGHT, ARE HEREBY RESERVED. THIS DRAWING SHALL NOT BE USED BY ANY PERSON FOR ANY PURPOSE OR PROJECT WITHOUT THE WRITTEN AUTHORIZATION OF MITCHELL GIURGOLA ARCHITECTS LLP. IF THIS DRAWING IS USED WITHOUT SUCH AUTHORIZATION, THE UNAUTHORIZED USER SHALL INDEMNIFY AND HOLD HARMLESS MITCHELL GIURGOLA ARCHITECTS LLP AND ITS CONSULTANTS AGAINST ALL DAMAGES, LIABILITIES AND COSTS, INCLUDING REASONABLE ATTORNEYS' FEES AND COURT COSTS, ARISING OUT OF OR AFFECTING THE UNAUTHORIZED USE.

KEY PLAN:



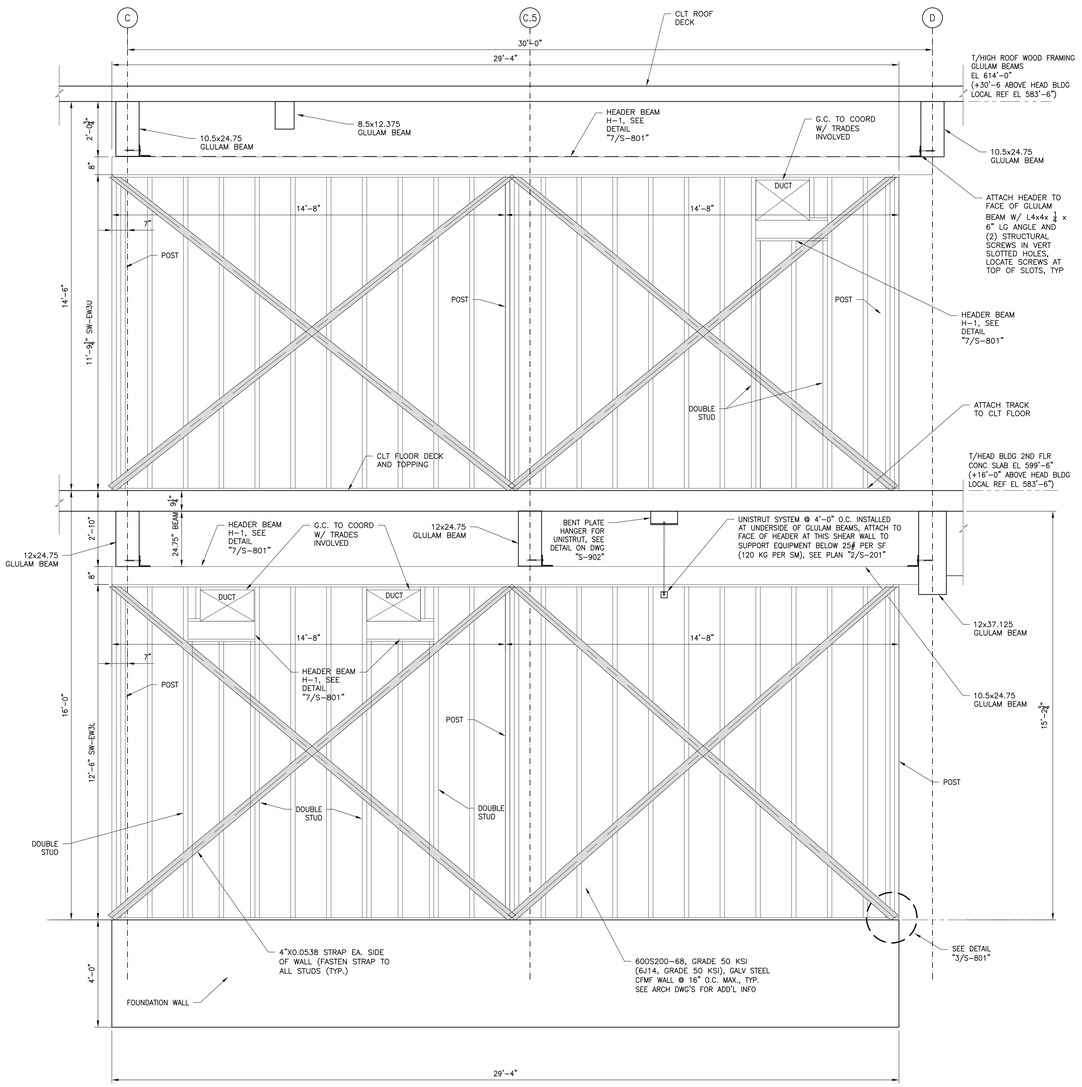
PLAN NORTH

PROJECT:
SCIENCE & TECHNOLOGY BUILDING

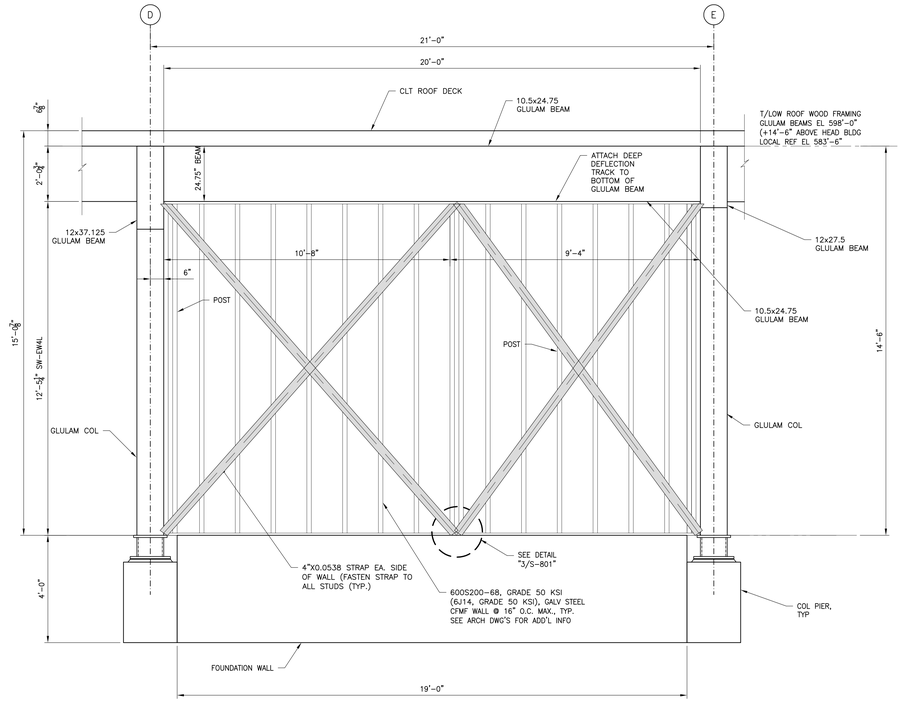
DRAWING TITLE:
HEAD BUILDING – CFMF SHEAR WALL ELEVATIONS

PROJECT NO: 23000	DATE: 9/23/2025
PHASE: REBID & CONSTRUCTION	SCALE: AS NOTED

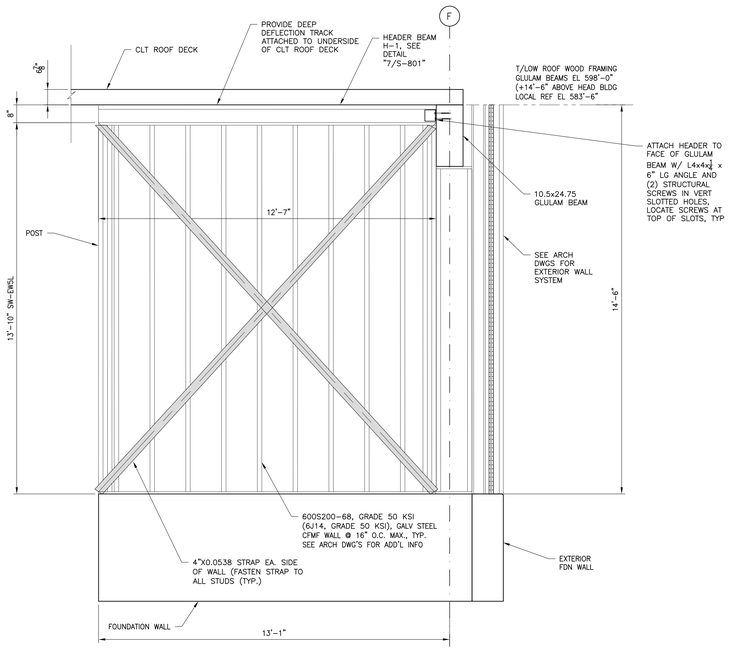
S-802



1 S-803 SHEAR WALL ELEVATION – SW–EW3L AND SW–EW3U
NO SCALE



2 S-803 SHEAR WALL ELEVATION – SW–EW4L
NO SCALE



3 S-803 SHEAR WALL ELEVATION – SW–EW5L
NO SCALE

SHEAR WALL ELEVATION NOTES:

1. REFER TO DWG S-801 FOR COLD-FORMED METAL FRAMING (CFMS) TYPICAL DETAILS AND GENERAL NOTES.
2. CONNECTION OF STRAP BRACING AT EACH END SHALL BE DESIGNED FOR AN UN-FACTORED AXIAL TENSION LOAD.
3. SOLID BLOCK / WALL BRIDGING NOT SHOWN IN ALL ELEVATIONS. SEE DWG S-801 FOR ADD'L INFO.

ONEIDA COUNTY NEW YORK 1798

MVCC
MOHAWK VALLEY COMMUNITY COLLEGE
1101 SHERMAN DRIVE
UTICA, NY 13501
(315) 792-5400

ARCHITECT:
MARCH ASSOCIATES ARCHITECTS & PLANNERS, PC
258 Genesee Street, Suite 300
Utica, New York 13501
315 733 3344

Mitchell Giurgola
Mitchell Giurgola Architects LLP
630 Ninth Avenue, Suite 711
New York, New York 10036
212 663 4000

STRUCTURAL ENGINEER:
Interactive Engineering Solutions, PC
1721 Black River Blvd, Suite L-1
Rome, NY 13440
315 339 7855
IE Solutions
Interactive Engineering Solutions P.C.
Certificate of Authorization No. 0022543
Expiration Date: 11/30/2027

MEP ENGINEER:
Towne Engineering
18 South Street
Utica, NY 13501
315 733 9000

SITE | CIVIL ENGINEER:
Appel Osborne Landscape Architecture
102 West Division Street, Suite 100
Syracuse, NY 13204
315 476 1022

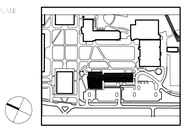
SEAL:
STATE OF NEW YORK DOUGLAS R. CAHILL 61675 LICENSED PROFESSIONAL ENGINEER
Douglas R. Cahill, PE
NYS Professional Engineer No. 61675
Expiration Date 3/31/2026

ISSUE/REVISION:

NO.	DATE	COMMENTS
1	9/23/25	REBID & CONSTRUCTION

COPYRIGHT © 2018 MITCHELL GIURGOLA ARCHITECTS LLP
ALL DIMENSIONS AND EXISTING CONDITIONS SHALL BE CHECKED AND VERIFIED BY THE CONTRACTOR BEFORE PROCEEDING WITH THE WORK.

KEY PLAN:



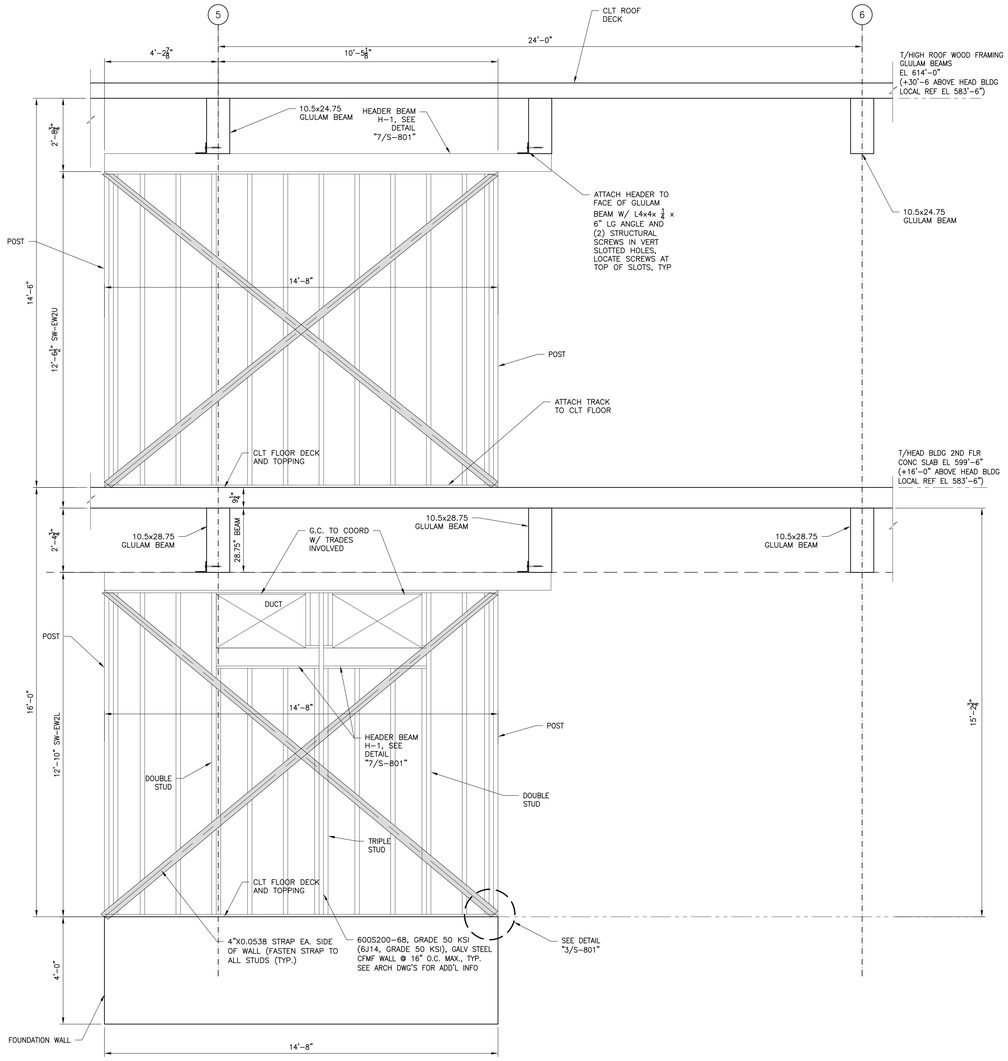
PLAN NORTH

PROJECT:
SCIENCE & TECHNOLOGY BUILDING

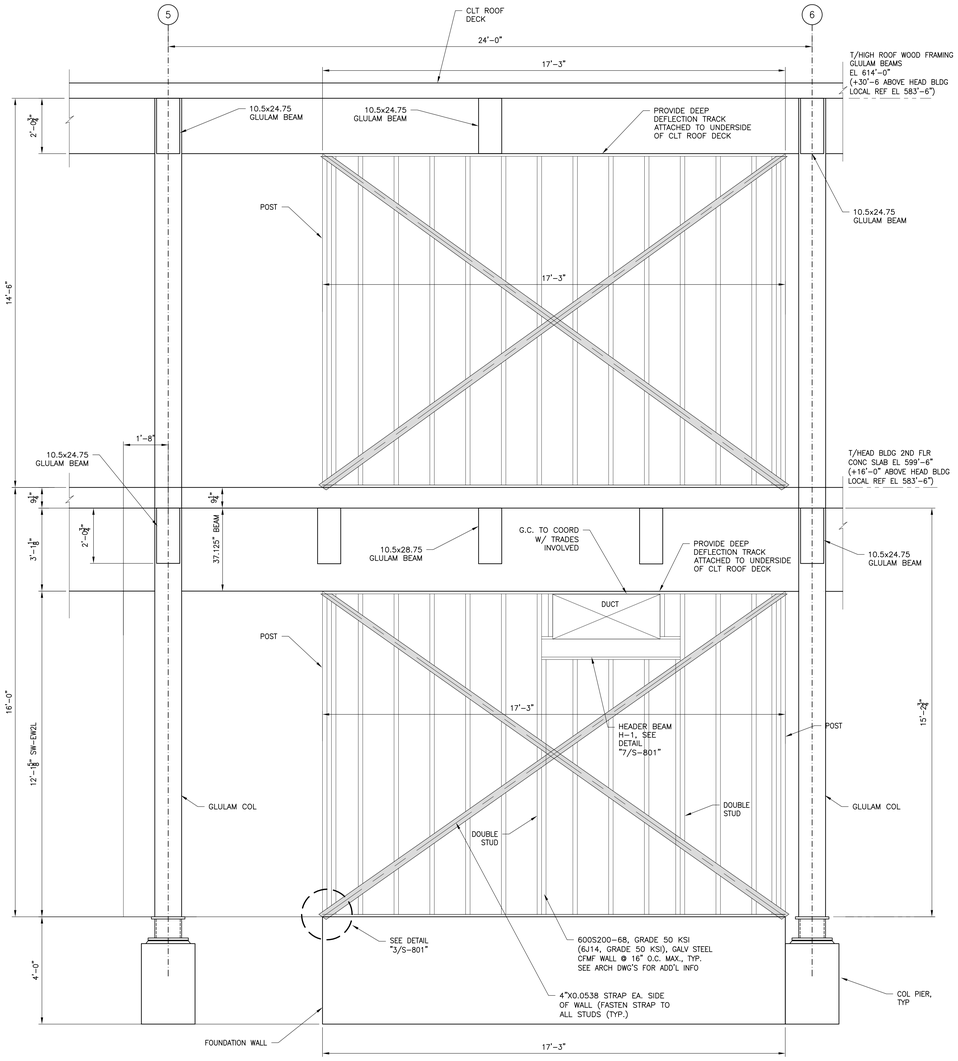
DRAWING TITLE:
HEAD BUILDING – CFMF SHEAR WALL ELEVATIONS

PROJECT NO: 23000 | DATE: 9/23/2025
PHASE: REBID & CONSTRUCTION | SCALE: AS NOTED

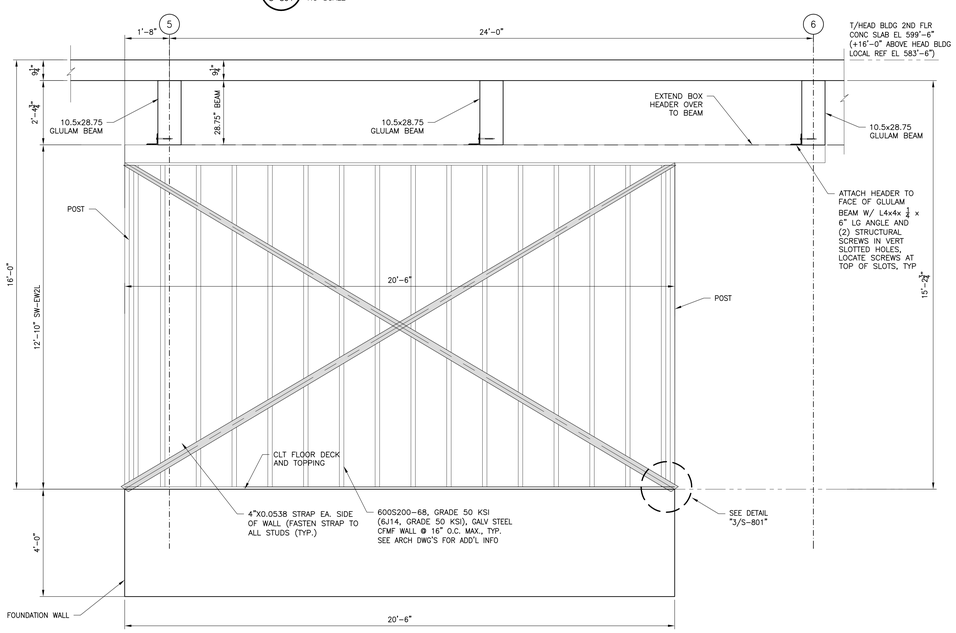
S-803



1 S-804 SHEAR WALL ELEVATION – SW-NS1L AND SW-NS1U
NO SCALE



3 S-804 SHEAR WALL ELEVATION – SW-NS3L AND SW-NS3U
NO SCALE



2 S-804 SHEAR WALL ELEVATION – SW-NS2L
NO SCALE

SHEAR WALL ELEVATION NOTES:

1. REFER TO DWG S-801 FOR COLD-FORMED METAL FRAMING (CFMS) TYPICAL DETAILS AND GENERAL NOTES.
2. CONNECTION OF STRAP BRACING AT EACH END SHALL BE DESIGNED FOR AN UN-FACTORED AXIAL TENSION LOAD.
3. SOLID BLOCK / WALL BRIDGING NOT SHOWN IN ALL ELEVATIONS. SEE DWG S-801 FOR ADD'L INFO.

ONEIDA COUNTY NEW YORK 1798

MVCC
MOHAWK VALLEY COMMUNITY COLLEGE
1101 SHERMAN DRIVE
UTICA, NY 13501
(315) 792-5400

ARCHITECT:
MARCH ASSOCIATES ARCHITECTS & PLANNERS, PC
258 Genesee Street, Suite 300
Utica, New York 13501
315 733 3344

Mitchell Giurgola
Mitchell Giurgola Architects LLP
630 Ninth Avenue, Suite 711
New York, New York 10036
212 663 4000

STRUCTURAL ENGINEER:
Interactive Engineering Solutions, PC
1721 Black River Blvd, Suite L-1
Rome, NY 13440
315 339 7855
IE Solutions
Interactive Engineering Solutions P.C.
Certificate of Authorization No. 0022543
Expiration Date: 11/30/2027

MEP ENGINEER:
Towne Engineering
18 South Street
Utica, NY 13501
315 733 9000

SITE | CIVIL ENGINEER:
Appel Osborne Landscape Architecture
102 West Division Street, Suite 100
Syracuse, NY 13204
315 476 1022

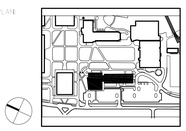
SEAL:

Douglas R. Cahill, PE
NYS Professional Engineer No. 61675
Expiration Date 3/31/2026

ISSUE/REVISIONS:		
NO.	DATE	COMMENTS
1	9/23/25	REBID & CONSTRUCTION

COPYRIGHT © 2018 MITCHELL GIURGOLA ARCHITECTS LLP
ALL DRAWINGS, MODELS, COMPUTER FILES, FIELD DATA AND NOTES ARE INSTRUMENTS OF SERVICE FOR WORK PRODUCED HERE AND SHALL

KEY PLAN:



PROJECT:

SCIENCE & TECHNOLOGY BUILDING

DRAWING TITLE:

HEAD BUILDING – CFMF SHEAR WALL ELEVATIONS

PROJECT NO: 23000	DATE: 9/23/2025
PHASE: REBID & CONSTRUCTION	SCALE: AS NOTED

S-804

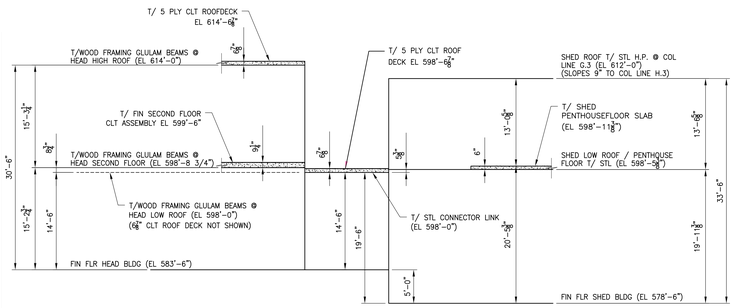
GLULAM COLUMN SCHEDULE – HEAD BUILDING

COLUMN MARK / ELEVATION	LINE 1					LINE 2						LINE 3								LINE 4								LINE 5						LINE 6						LINE 7					
	B	C	D	E	F	A	B	C	D	E	F	A	B	B.5	C	C.5	D	E	F	A	B	B.5	C	C.5	D	E	F	A	B	C	D	E	F	A	B	C	D	E	F	A	B	C	D	E	F
T/5 PLY CLT ROOF DECK EL 614'-6⅞" (+31'-0⅞")																																												
T/WOOD FRAMING GLULAM BEAM @ HEAD BLDG HIGH ROOF EL 614'-0" (+30'-0")																																												
T/FIN SECOND FLR CLT + CONC ASSEMBLY EL 599'-6" (+16'-0")																																												
T/WOOD FRAMING GLULAM BEAM @ HEAD BLDG SECOND FLR EL 598'-8⅜" (+15'-2⅜")																																												
EL 598'-0" T/WOOD FRAMING GLULAM BEAM @ HEAD LOW ROOF (6⅜" CLT ROOF DECK NOT SHOWN)																																												
FIN HEAD FIRST FLOOR EL 583'-6 (LOCAL 0'-0")																																												
FIN SHED FIRST FLOOR EL 578'-6 (LOCAL 0'-0")																																												
BOTTOM OF STANDOFF POST LOWER BASE PLATES																																												
STAND OFF POST LOWER BASE PLATE TYPE	D	C	C	C	D	E	G	A	A	A	D	F	A	A	A	A	A	A	H	C	A	A	A	A	A	H	C	A	A	A	A	C	C	A	A	A	A	C	D	A	A	J	J	D
	SIM	SIM	SIM	SIM	SIM	*	*					*							*							*																*	*	
COLUMN SPREAD FOOTING LOADS: (SEE NOTE 5)																																												
UN-FACTORED DEAD LOADS (KIPS)	25k	30k	25k	20k	5k	45k	75k	80k	55k	25k	15k	55k	85k	40k	110k	40k	85k	50k	35k	70k	100k	40k	110k	40k	85k	50k	35k	80k	105k	105k	85k	50k	35k	80k	85k	85k	85k	50k	35k	75k	70k	65k	60k	35k	30k
UN-FACTORED LIVE LOADS+SNOW LOADS (KIPS)	15k	20k	15k	10k	5k	15k	60k	80k	60k	45k	25k	20k	80k	30k	110k	30k	80k	65k	40k	45k	95k	30k	125k	30k	90k	65k	40k	65k	120k	140k	100k	65k	40k	60k	115k	140k	100k	65k	40k	25k	60k	80k	55k	35k	25k
TOTAL UN-FACTORED LOADS (KIPS)	40k	50k	40k	30k	10k	60k	135k	160k	115k	70k	40k	75k	165k	70k	220k	70k	165k	115k	75k	115k	195k	70k	225k	70k	175k	115k	75k	145k	225k	245k	185k	115k	75k	140k	225k	225k	185k	115k	75k	100k	130k	145k	115k	70k	55k
	LINE 1					LINE 2						LINE 3								LINE 4								LINE 5						LINE 6						LINE 7					
	B	C	D	E	F	A	B	C	D	E	F	A	B	B.5	C	C.5	D	E	F	A	B	B.5	C	C.5	D	E	F	A	B	C	D	E	F	A	B	C	D	E	F	A	B	C	D	E	F

NOTE DIFFERENT SIZE

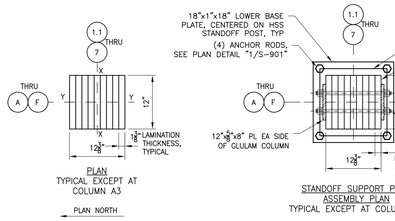
STANDOFF SUPPORT POST ASSEMBLIES – SEE PLAN & ELEVATION DETAILS, TYP

SEE NOTE 6 FOR X-BRACE RELATED BASE PLATES, TYP



BUILDING ELEVATION DIAGRAM

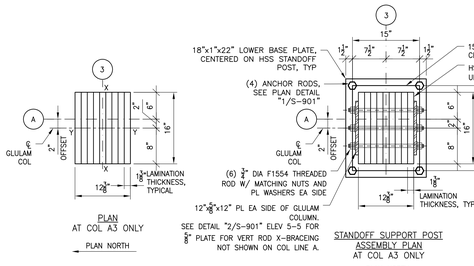
NOTES:
1. DIMENSIONS SHOWN ARE TO BOTTOM OF WOOD COLUMN. STANDOFF POST LOWER BASE PLATES.
2. COORDINATE TOP OF COLUMNS W/TOP OF GLULAM BEAMS/ GIRDERS SHOWN ON PLANS AND SECTIONS/DETAILS.
3. "BASIS OF DESIGN" PROPERTIES:
   COLUMNS: VISUALLY GRADED SOUTHERN PINE
   COMBINATION SYMBOL: 47 1-8
   UNIFORM GRADE LAYUP: N2M
4. COLUMN ORIENTATION: ALL COLUMNS SHALL BE ORIENTED IN THE SAME DIRECTION AS SHOWN.
5. COLUMN SPREAD FOOTING LOADS ARE PROVIDED FOR USE BY THE SPECIALTY CONTRACTOR'S GROUND IMPROVEMENT DELEGATED DESIGN PROFESSIONAL ENGINEER. ALL LOADS ARE UN-FACTORED MAXIMUM DESIGN LOADS.
6. * DESIGNATES COLUMN BASE PLATES THAT OCCUR AT X-BRACING. SEE PLAN DRAWING S-201, DRAWING S-901.1 FOR BASE PLATE DETAILS AND DRAWING S-905 FOR X-BRACE ELEVATIONS.



PLAN
TYPICAL EXCEPT AT COLUMN A3

PLAN NORTH

STANDOFF SUPPORT POST ASSEMBLY PLAN
TYPICAL EXCEPT AT COLUMN A3

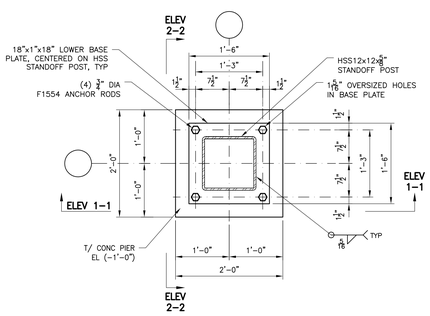


PLAN
AT COL A3 ONLY

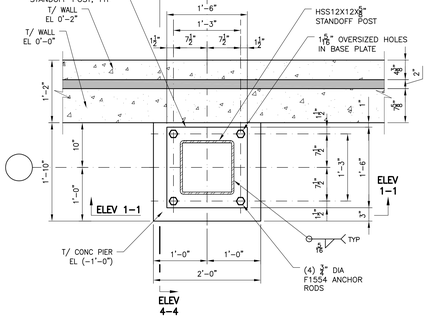
PLAN NORTH

STANDOFF SUPPORT POST ASSEMBLY PLAN
AT COL A3 ONLY

PLAN NORTH

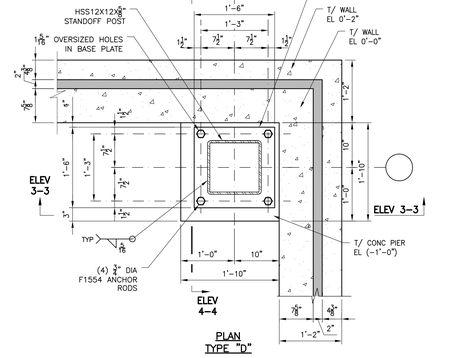


PLAN
TYPE "A"



PLAN
TYPE "B"

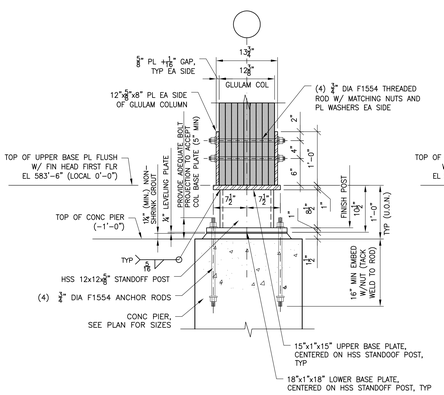
PLAN
TYPE "C"



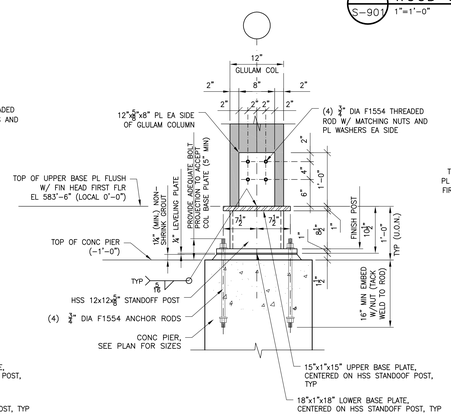
PLAN
TYPE "D"

NOT USED

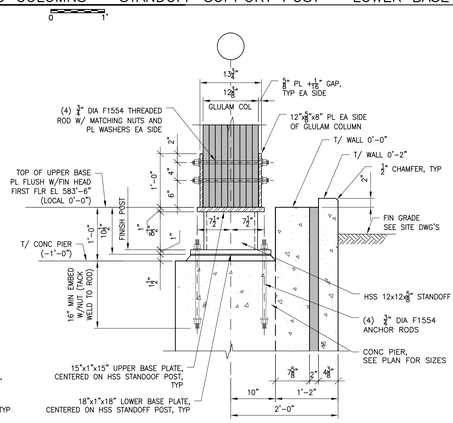
1 S-901 WOOD COLUMNS – STANDOFF SUPPORT POST – LOWER BASE PLATE DETAIL TYPES
1"=1'-0"



ELEVATION
1-1

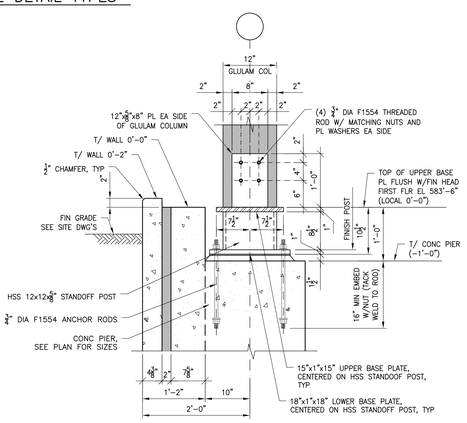


ELEVATION
2-2



NOTES:
1. SEE DETAIL "2/S901" WOOD COLUMNS– STANDOFF SUPPORT POST ASSEMBLIES – ELEVATION 1-1, FOR MORE INFORMATION NOT SHOWN.

ELEVATION
3-3



NOTES:
1. SEE DETAIL "2/S901" WOOD COLUMNS– STANDOFF SUPPORT POST ASSEMBLIES – ELEVATION 2-2, FOR MORE INFORMATION NOT SHOWN.

ELEVATION
4-4

2 S-901 WOOD COLUMNS – STANDOFF SUPPORT POST ASSEMBLIES – ELEVATIONS
1"=1'-0"

ONEIDA COUNTY NEW YORK 1798

MVCC
MOHAWK VALLEY COMMUNITY COLLEGE
1101 SHERMAN DRIVE
UTICA, NY 13501
(315) 792-5400

ARCHITECT:
MARCH ASSOCIATES ARCHITECTS & PLANNERS, PC
258 Genesee Street, Suite 300
Utica, New York 13501
315 733 3344

Mitchell Giurgola
Mitchell Giurgola Architects LLP
630 Ninth Avenue, Suite 711
New York, New York 10036
212 663 4000

STRUCTURAL ENGINEER:
Interactive Engineering Solutions, PC
1721 Black River Blvd, Suite L-1
Rome, NY 13440
315 339 7855
IE Solutions
Interactive Engineering Solutions P.C.
Certificate of Authorization No. 0522543
Expiration Date: 11/30/2027

MEP ENGINEER:
Towne Engineering
18 South Street
Utica, NY 13501
315 733 9000

SITE | CIVIL ENGINEER:
Appel Osborne Landscape Architecture
102 West Division Street, Suite 100
Syracuse, NY 13204
315 476 1022

SEAL:



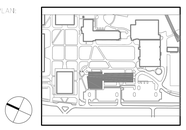
Douglas R. Cahill, PE
NYS Professional Engineer No. 61675
Expiration Date 3/31/2026

ISSUE/REVISION:

NO.	DATE	COMMENTS
1	9/23/25	REBID & CONSTRUCTION

COPYRIGHT © 2018 MITCHELL GIURGOLA ARCHITECTS LLP
ALL DIMENSIONS AND CONDITIONS SHALL BE CHECKED AND VERIFIED BY THE CONTRACTOR BEFORE PROCEEDING WITH THE WORK.

KEY PLAN:



PROJECT:

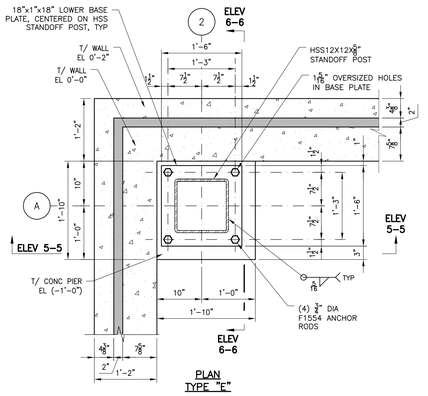
SCIENCE & TECHNOLOGY BUILDING

DRAWING TITLE:

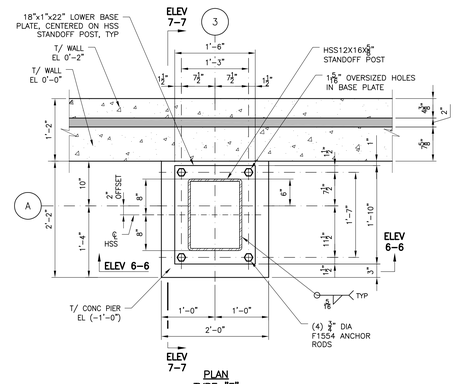
HEAD BUILDING – WOOD FRAMING COLUMN SCHEDULE AND DETAILS

PROJECT NO: 23000 | DATE: 9/23/2025
PHASE: REBID & CONSTRUCTION | SCALE: AS NOTED

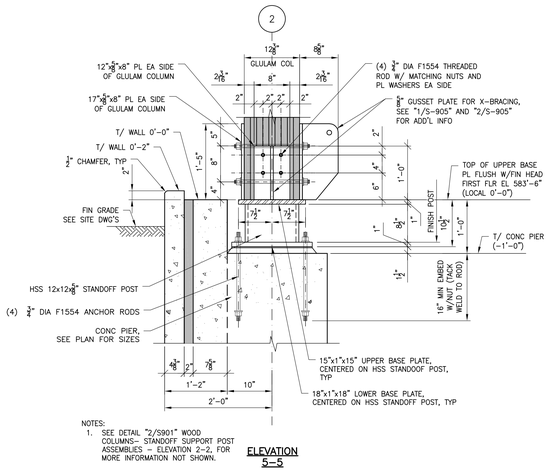
S-901



PLAN
TYPE "E"

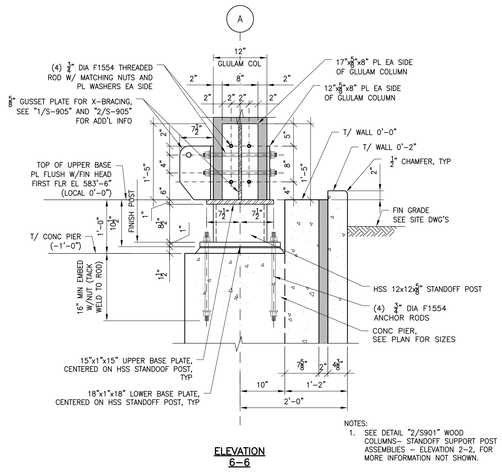


PLAN
TYPE "F"



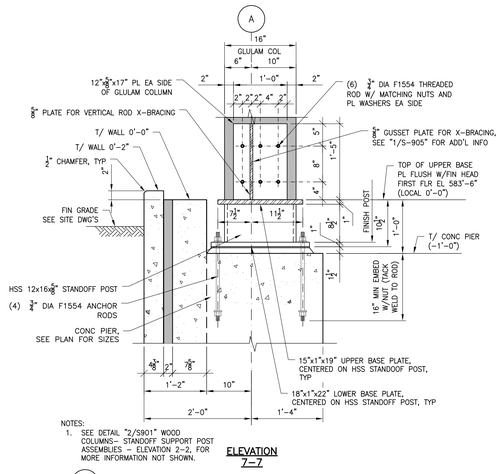
NOTES:
1. SEE DETAIL "2/S901" WOOD COLUMNS– STANDOFF SUPPORT POST ASSEMBLIES – ELEVATION 2–2, FOR MORE INFORMATION NOT SHOWN.

ELEVATION
5–5



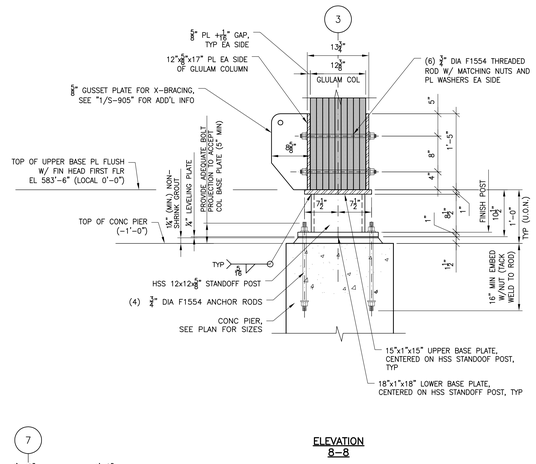
NOTES:
1. SEE DETAIL "2/S901" WOOD COLUMNS– STANDOFF SUPPORT POST ASSEMBLIES – ELEVATION 2–2, FOR MORE INFORMATION NOT SHOWN.

ELEVATION
6–6

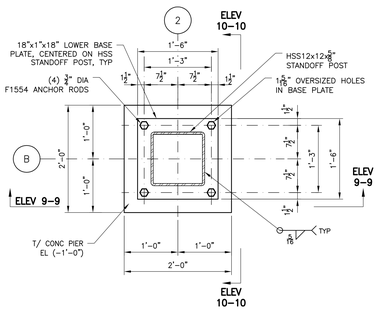


NOTES:
1. SEE DETAIL "2/S901" WOOD COLUMNS– STANDOFF SUPPORT POST ASSEMBLIES – ELEVATION 2–2, FOR MORE INFORMATION NOT SHOWN.

ELEVATION
7–7

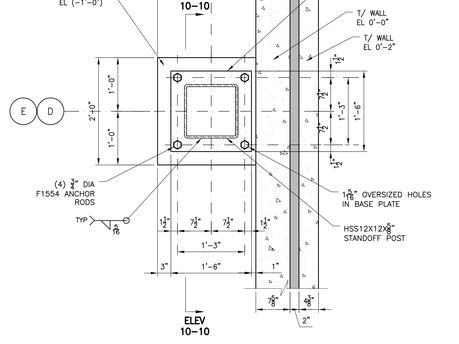


ELEVATION
8–8

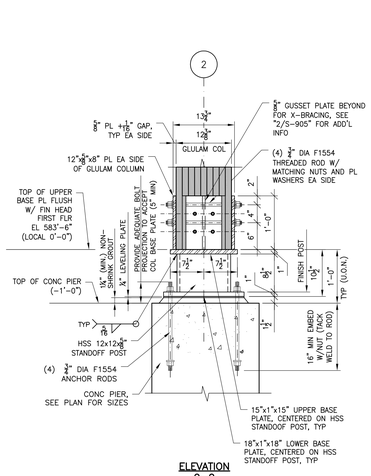


PLAN
TYPE "G"

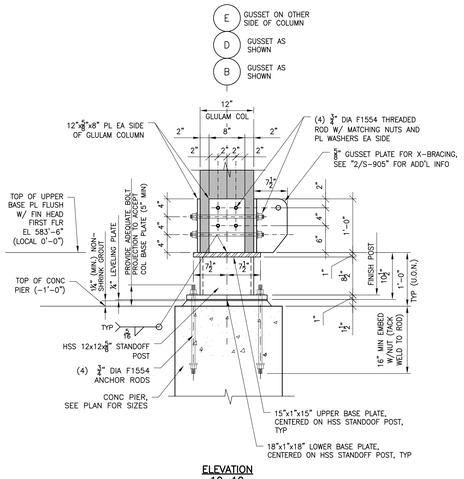
PLAN
TYPE "H"



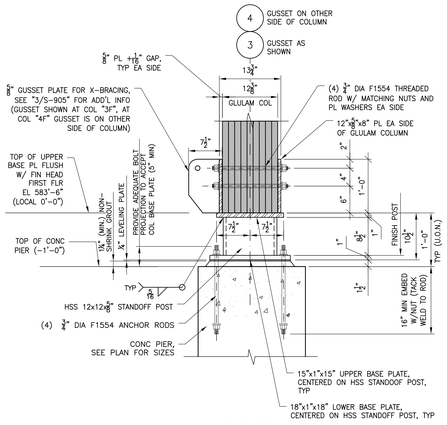
PLAN
TYPE "J"



ELEVATION
9–9



ELEVATION
10–10



ELEVATION
11–11

ONEIDA COUNTY NEW YORK 1798

MVCC
MOHAWK VALLEY COMMUNITY COLLEGE
1101 SHERMAN DRIVE
UTICA, NY 13501
(315) 792-5400

ARCHITECT:
MARCH ASSOCIATES ARCHITECTS & PLANNERS, PC
258 Genesee Street, Suite 300
Utica, New York 13501
315 733 3344

Mitchell Giurgola
Mitchell Giurgola Architects LLP
630 Ninth Avenue, Suite 711
New York, New York 10036
212 663 4000

STRUCTURAL ENGINEER:
Interactive Engineering Solutions, PC
1721 Black River Blvd, Suite L-1
Rome, NY 13440
315 339 7855
IE Solutions
Interactive Engineering Solutions P.C.
Certificate of Authorization No. 0922543
Expiration Date: 11/30/2027

MEP ENGINEER:
Towne Engineering
18 South Street
Utica, NY 13501
315 733 9000

SITE | CIVIL ENGINEER:
Appel Osborne Landscape Architecture
102 West Division Street, Suite 100
Syracuse, NY 13204
315 476 1022

SEAL:

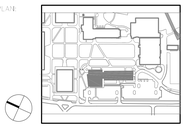
Douglas R. Cahill, PE
NYS Professional Engineer No. 61675
Expiration Date 3/31/2026

ISSUE/REVISION:

NO.	DATE	COMMENTS
1	9/23/25	REBID & CONSTRUCTION

COPYRIGHT © 2018 MITCHELL GIURGOLA ARCHITECTS LLP
ALL DRAWINGS AND DESIGNS CONTAINED SHALL BE USED ONLY FOR THE PROJECT AND SHALL NOT BE REPRODUCED BY THE CONTRACTOR BEFORE RECEIVING BOTH THE SEAL.

KEY PLAN:



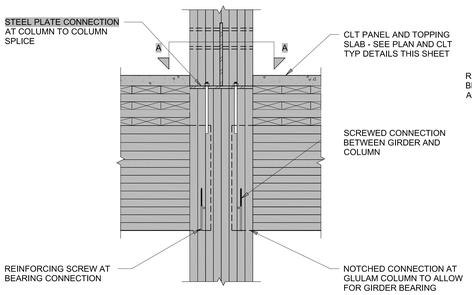
PLAN NORTH

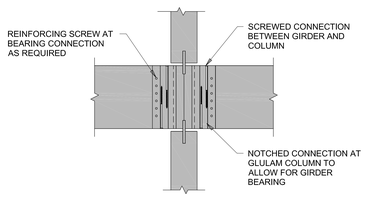
PROJECT:
SCIENCE & TECHNOLOGY BUILDING

DRAWING TITLE:
HEAD BUILDING – WOOD FRAMING COLUMN BASE PLATE DETAILS AT X–BRACES

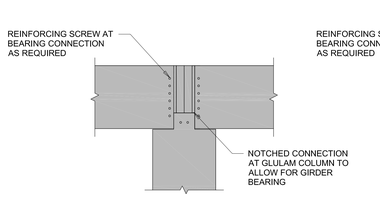
PROJECT NO: 23000 | DATE: 9/23/2025
PHASE: REBID & CONSTRUCTION | SCALE: AS NOTED

S-901.1

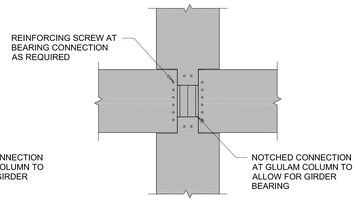




PLAN DETAIL A-A
BEAM AT TWO-SIDES



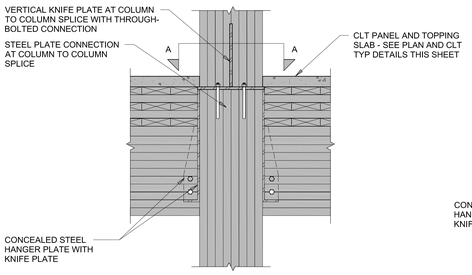
PLAN DETAIL A-A
BEAM AT THREE-SIDES

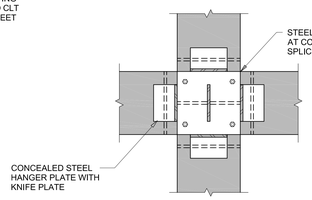


PLAN DETAIL A-A
BEAM AT FOUR-SIDES

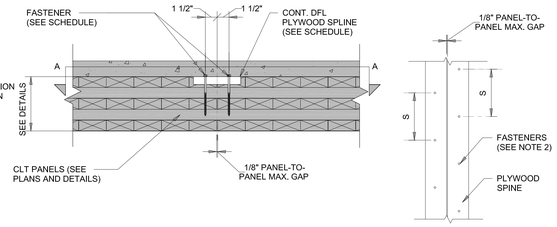
GIRDER TO COLUMN BEARING CONNECTION - BEARING CONNECTION

N.T.S.



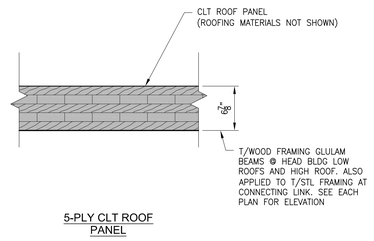


PLAN DETAIL A-A

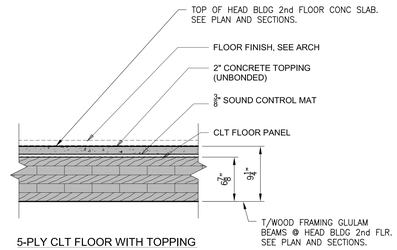


SECTION A-A

NOTES:
1. FINAL SPLICE DETAILS PENDING PANEL LAYOUT. PANEL LAYOUT TO BE PROVIDED BY CLT MANUFACTURER.
2. FASTENERS TO BE STAGGERED ACROSS JOINT LINE, AS SHOWN.
3. APPROVED SPLINE FASTENERS ARE AS FOLLOWS:
   A. ASSY ECOFAST BY SWG
   B. STRONG-DIVE SDCP TIMBER-CP BY SIMPSON STRONG-TIE



5-PLY CLT ROOF PANEL

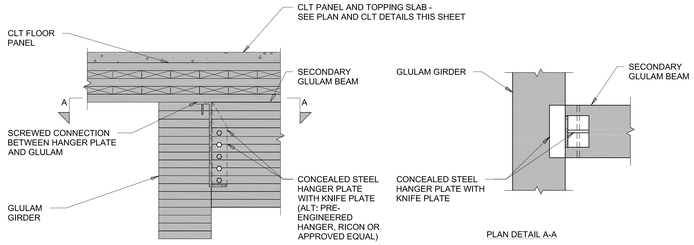


5-PLY CLT FLOOR WITH TOPPING

NOTES:
1. SEE ARCHITECTURAL DRAWINGS FOR TOPPING SLAB LAYOUT AND BALANCE OF INFORMATION AT FLOOR BUILD-UP

GIRDER TO COLUMN CONNECTION - FRAMING ON THREE OR FOUR SIDES OF COLUMN

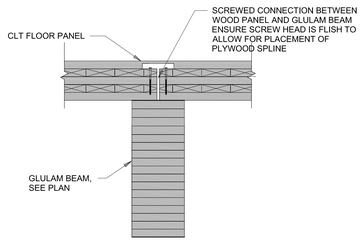
1" = 1'-0"



PLAN DETAIL A-A

CLT PANEL-TO-PANEL JOINT (PLYWOOD SPLINE)

N.T.S.



TYPICAL FLOOR AND ROOF BUILT-UP DETAILS

N.T.S.

GLUED LAMINATED TIMBER (GLULAM) CONNECTION NOTES:

1. GENERAL PERFORMANCE REQUIREMENTS – CONNECTIONS

   TO THE GREATEST EXTENT PRACTICAL, THE FINAL CONNECTIONS SHALL BE MADE WITH STEEL HARDWARE UTILIZING EXPOSED CONNECTIONS.

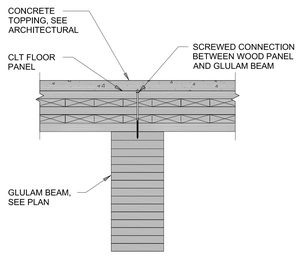
   a. CONNECTIONS SHALL BE DESIGNED BY A PROFESSIONAL ENGINEER LICENSED IN THE STATE OF NEW YORK RETAINED BY THE TIMER FABRICATOR AND EXPERIENCED IN THE DESIGN OF MASS TIMBER CONNECTIONS. DRAWINGS AND CALCULATIONS OF COMPONENTS DESIGNED BY THE TIMBER FABRICATOR SHALL BE SIGNED AND SEALED BY THE PROFESSIONAL ENGINEER LICENSED IN THE STATE OF NEW YORK. UNLESS OTHERWISE NOTED ON PLAN, PROVIDE CONNECTIONS BASED ON THE MINIMUM SHEAR CAPACITY REQUIREMENTS IN THE TABLE ON EACH FLOOR PLAN.

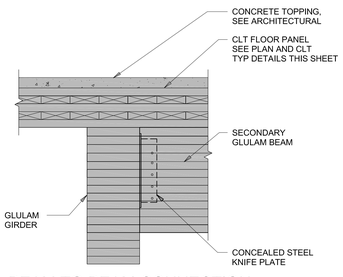
   b. THE INFORMATION SHOWN ON THE STRUCTURAL AND ARCHITECTURAL DRAWINGS ARE INTENDED TO REPRESENT 'TYPICAL DETAILS', INCLUDING THE MINIMUM MEMBERS SIZES AND BASIC REQUIREMENTS FOR THE GLUED LAMINATED TIMBER (GLULAM) MEMBERS. THE MORE STRINGENT OF THE REQUIREMENTS FROM THE DELEGATED STRUCTURAL ENGINEERING PERFORMANCE DESIGN CALCULATIONS, THE ASSOCIATED ENGINEERED SHOP DRAWING DETAILS AND THE MINIMUM REQUIREMENTS SHOWN WITHIN THE CONTRACT DOCUMENTS SHALL APPLY.

   c. REFER TO THE GLUED LAMINATED TIMBER (GLULAM) NOTES ON DRAWING S-904 AND SPECIFICATION SECTION 06 18 00 'STRUCTURAL GLUED-LAMINATED TIMBER & CROSS-LAMINATED TIMBER (CLT) PANEL CONSTRUCTION' FOR ADDITIONAL INFORMATION.

BEAM TO BEAM CONNECTION - CONCEALED HANGER PLATE

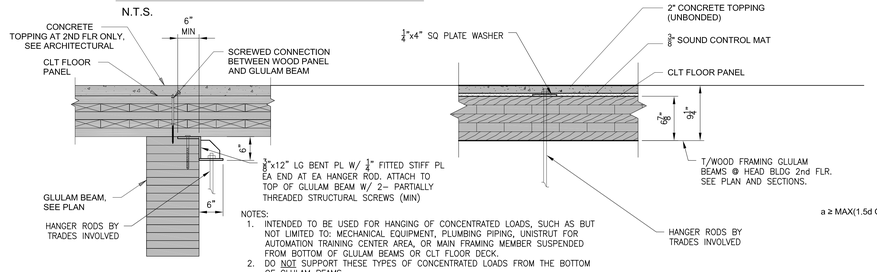
N.T.S.





TYPICAL FLOOR PANEL TO BEAM CONNECTION AT PANEL JOINT - PANEL BEARING CONNECTION WITH SCREWS

N.T.S.



1/4"x12" LG BENT PL W/ 1/4" FITTED STIFF PL EA END AT EA HANGER ROD. ATTACH TO TOP OF GLULAM BEAM W/ 2– PARTIALLY THREADED STRUCTURAL SCREWS (MIN)

NOTES:
1. INTENDED TO BE USED FOR HANGING OF CONCENTRATED LOADS, SUCH AS BUT NOT LIMITED TO: MECHANICAL EQUIPMENT, PLUMBING PIPING, UNISTRUT FOR AUTOMATION TRAINING CENTER AREA, OR MAIN FRAMING MEMBER SUSPENDED FROM BOTTOM OF GLULAM BEAMS OR CLT FLOOR DECK.
2. DO NOT SUPPORT THESE TYPES OF CONCENTRATED LOADS FROM THE BOTTOM OF GLULAM BEAMS.

FLOOR PANEL TO BEAM CONNECTION - PANEL BEARING CONNECTION WITH SCREWS

N.T.S.

BEAM TO BEAM CONNECTION - CONCEALED KNIFE PLATE

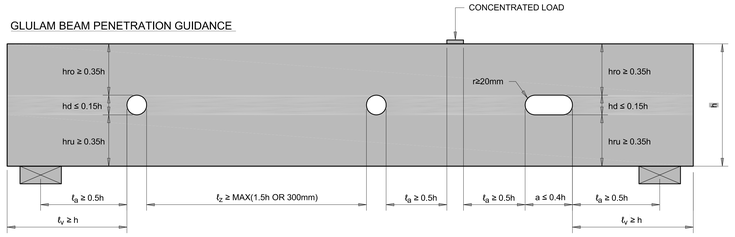
N.T.S.

CONCENTRATED LOADS SUSPENDED FROM GLULAM BEAM

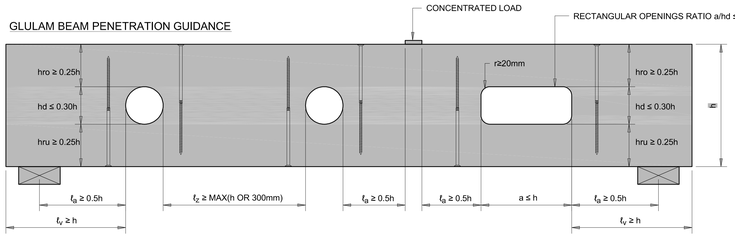
N.T.S.

CONCENTRATED LOADS SUSPENDED FROM CLT FLOOR DECK

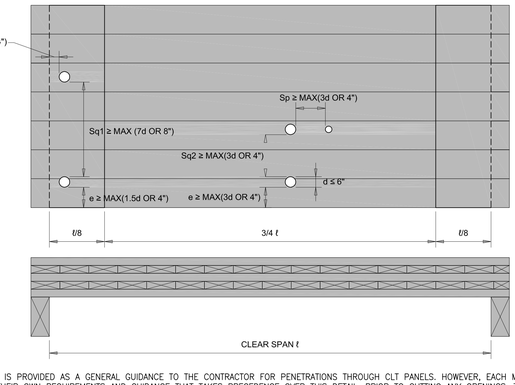
N.T.S.



NOTES:
1. THIS DETAIL IS PROVIDED AS A GENERAL GUIDANCE TO THE CONTRACTOR FOR PENETRATIONS THROUGH GLULAM BEAMS AND GIRDERS. HOWEVER, EACH MANUFACTURE MAY HAVE THEIR OWN REQUIREMENTS AND GUIDANCE THAT TAKES PRECEDENCE OVER THIS DETAIL. PRIOR TO CUTTING ANY OPENINGS, THE CONTRACTOR SHALL COORDINATE ALL REQUIREMENTS WITH THE MEMBER / PRODUCT REQUIREMENTS.
2. SHEAR RESISTANCE AT REDUCED SECTION, BENDING STRESS RESISTANCE ABOVE AND BELOW OPENING AND SPLITTING RESISTANCE MUST BE VERIFIED.
3. OPENING SIZE: THE OPENING HEIGHT SHOULD NOT EXCEED 0.15h, WHERE h IS THE BEAM DEPTH. FOR RECTANGULAR OPENINGS, THE OPENING WIDTH SHOULD NOT EXCEED 0.4h
4. OPENING LOCATION: THE OPENING SHOULD HAVE A MINIMUM CLEAR DISTANCE, AS MEASURED FROM THE EDGE OF THE OPENING, OF 0.35h TO THE TOP OR BOTTOM FACE OF THE BEAM, h TO THE END OF THE BEAM AND 0.5h TO THE CENTER OF SUPPORT. IF THERE IS A CONCENTRATED LOAD, THE OPENING SHOULD HAVE A MINIMUM CLEAR DISTANCE OF 0.5h, AS MEASURED FROM THE EDGE OF THE OPENING TO THE NEAREST EDGE OF THE LOAD.
5. OPENING SPACING: THE MINIMUM CLEAR DISTANCE BETWEEN ANY ADJACENT OPENINGS SHOULD BE 1.5h OR 300mm, WHICHEVER IS LARGER.
6. SEE ARCH DWG A–870 FOR ADDITIONAL INFORMATION.



NOTES:
1. THIS DETAIL IS PROVIDED AS A GENERAL GUIDANCE TO THE CONTRACTOR FOR PENETRATIONS THROUGH GLULAM BEAMS AND GIRDERS. HOWEVER, EACH MANUFACTURE MAY HAVE THEIR OWN REQUIREMENTS AND GUIDANCE THAT TAKES PRECEDENCE OVER THIS DETAIL. PRIOR TO CUTTING ANY OPENINGS, THE CONTRACTOR SHALL COORDINATE ALL REQUIREMENTS WITH THE MEMBER / PRODUCT REQUIREMENTS.
2. SHEAR RESISTANCE AT REDUCED SECTION, BENDING STRESS RESISTANCE ABOVE AND BELOW OPENING MUST BE VERIFIED. SCREW REINFORCEMENT PREVENTING WOOD SPLITTING MUST BE DESIGNED BY A QUALIFIED MASS TIMBER DESIGN ENGINEER. MINIMUM ONE SCREW IS REQUIRED ON EACH SIDE OF OPENING.
3. OPENING SIZE: THE OPENING HEIGHT SHOULD NOT EXCEED 0.3h, WHERE h IS THE BEAM DEPTH. FOR RECTANGULAR OPENINGS, THE OPENING WIDTH SHOULD NOT EXCEED h.
4. OPENING LOCATION: THE OPENING SHOULD HAVE A MINIMUM CLEAR DISTANCE, AS MEASURED FROM THE EDGE OF THE OPENING, OF 0.25h TO THE TOP OR BOTTOM FACE OF THE BEAM, h TO THE END OF THE BEAM AND 0.5h TO THE CENTER OF SUPPORT. IF THERE IS A CONCENTRATED LOAD, THE OPENING SHOULD HAVE A MINIMUM CLEAR DISTANCE OF 0.5h, AS MEASURED FROM THE EDGE OF THE OPENING TO THE NEAREST EDGE OF THE LOAD.
5. OPENING SPACING: THE MINIMUM CLEAR DISTANCE BETWEEN ANY ADJACENT OPENINGS SHOULD BE h OR 300 mm, WHICHEVER IS LARGER.



NOTES:
1. THIS DETAIL IS PROVIDED AS A GENERAL GUIDANCE TO THE CONTRACTOR FOR PENETRATIONS THROUGH CLT PANELS. HOWEVER, EACH MANUFACTURE MAY HAVE THEIR OWN REQUIREMENTS AND GUIDANCE THAT TAKES PRECEDENCE OVER THIS DETAIL. PRIOR TO CUTTING ANY OPENINGS, THE CONTRACTOR SHALL COORDINATE ALL REQUIREMENTS WITH THE MEMBER / PRODUCT REQUIREMENTS.
2. HOLE SIZE: THE HOLE SHOULD BE ROUND AND THE HOLE DIAMETER (d) SHOULD NOT EXCEED 6".
3. DISTANCE FROM THE SUPPORT (a): THE HOLE SHOULD HAVE A MINIMUM CLEAR DISTANCE, AS MEASURED FROM THE EDGE TO THE NEAREST INSIDE FACE OF THE PANEL, OF 1.5 HOLE DIAMETER (d) OR 4", WHICHEVER IS LARGER.
4. EDGE DISTANCE (e): THE HOLE SHOULD HAVE A MINIMUM CLEAR DISTANCE, AS MEASURED FROM THE EDGE OF THE HOLE TO THE NEAREST EDGE OF THE PANEL, OF 1.5 HOLE DIAMETER (d) OR 4", WHICHEVER IS LARGER.
5. LONGITUDINAL SPACING (Sp): THE MINIMUM CLEAR DISTANCE PARALLEL TO GRAIN BETWEEN ADJACENT HOLE EDGES SHALL EXCEED 3 TIMES THE DIAMETER OF THE LARGEST ADJACENT HOLE OR 4", WHICHEVER IS LARGER.
6. TRANSVERSE SPACING, IN A ZONE OF 1/8 OF THE SPAN FROM THE SUPPORT (Sq): THE MINIMUM CLEAR DISTANCE PERPENDICULAR TO GRAIN BETWEEN ADJACENT HOLE EDGES SHALL EXCEED 7 TIMES THE DIAMETER OF THE LARGEST ADJACENT HOLE OR 8", WHICHEVER IS LARGER.
7. TRANSVERSE SPACING, IN THE MIDDLE 3/4 OF THE SPAN (Sq): THE MINIMUM CLEAR DISTANCE PERPENDICULAR TO GRAIN BETWEEN ADJACENT HOLE EDGES SHALL EXCEED 3 TIMES THE DIAMETER OF THE LARGEST ADJACENT HOLE OR 4", WHICHEVER IS LARGER.
8. IF THESE REQUIREMENTS CANNOT BE MET, DRILLING OF HOLES MUST BE REVIEWED BY E.O.R.
9. ALLOWABLE PENETRATIONS SHOWN ARE APPLICABLE TO SIMPLE AND MULTIPLE SPAN SLABS WITH UNIFORMLY DISTRIBUTED LOADS ONLY.

GLULAM BEAM PENETRATIONS WITHOUT REINFORCEMENT

N.T.S.

GLULAM BEAM PENETRATIONS WITH REINFORCEMENT

N.T.S.

CLT PANEL - ALLOWABLE OPENINGS

N.T.S.

ONEIDA COUNTY NEW YORK 1798

MVCC
MOHAWK VALLEY COMMUNITY COLLEGE

1101 SHERMAN DRIVE
UTICA, NY 13501
(315) 792–5400

ARCHITECT:

MARCH ASSOCIATES ARCHITECTS & PLANNERS, PC
258 Genesee Street, Suite 300
Utica, New York 13501
315 733 3344

Mitchell Giurgola
Mitchell Giurgola Architects LLP
630 Ninth Avenue, Suite 711
New York, New York 10036
212 663 4000

STRUCTURAL ENGINEER:
Interactive Engineering Solutions, PC
1721 Black River Blvd, Suite L–1
Rome, NY 13440
315 339 7855

IE Solutions
Interactive Engineering Solutions P.C.
Certificate of Authorization No. 0922543
Expiration Date: 11/30/2027

MEP ENGINEER:
Towne Engineering
18 South Street
Utica, NY 13501
315 733 9000

SITE | CIVIL ENGINEER:
Appel Osborne Landscape Architecture
102 West Division Street, Suite 100
Syracuse, NY 13204
315 476 1022

SEAL:

STATE OF NEW YORK — DOUGLAS R. CAHILL — 61675 — LICENSED PROFESSIONAL ENGINEER

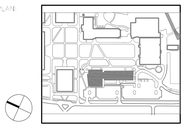
Douglas R. Cahill, PE
NYS Professional Engineer No. 61675
Expiration Date 3/31/2026

ISSUANCE:

NO.	DATE	COMMENTS
1	9/23/25	REBID & CONSTRUCTION

COPYRIGHT © 2018 MITCHELL GIURGOLA ARCHITECTS LLP
ALL DRAWINGS AND ELECTRONIC DATA ARE AND SHALL REMAIN THE PROPERTY OF THE ARCHITECT WHETHER THE PROJECT FOR WHICH THEY ARE MADE IS EXECUTED OR NOT. THEY ARE NOT TO BE USED BY THE OWNER OR OTHERS ON EXTENSIONS OF THE PROJECT OR ON ANY OTHER PROJECT WITHOUT THE WRITTEN AGREEMENT OF THE ARCHITECT. ALL COMMON LAW, STATUTORY AND OTHER RESERVED RIGHTS, INCLUDING COPYRIGHT, ARE HEREBY RESERVED BY THE ARCHITECT. ALL DRAWINGS AND ELECTRONIC DATA SHALL BE RETURNED OR DESTROYED UPON REQUEST OF THE ARCHITECT. THE OWNER AND ITS CONSULTANTS AGREE NOT TO REPRODUCE THE DRAWINGS AND ELECTRONIC DATA, NOR RETAIN ANY ELECTRONIC DATA, ON ANY OTHER PROJECT WITHOUT THE WRITTEN AGREEMENT OF THE ARCHITECT. THE OWNER AND ITS CONSULTANTS AGREE TO INDEMNIFY AND HOLD THE ARCHITECT AND ITS CONSULTANTS HARMLESS FROM ANY CLAIM, LIABILITY OR COST (INCLUDING REASONABLE ATTORNEYS FEES AND COSTS OF DEFENSE) ARISING OUT OF OR IN CONNECTION WITH THE UNAUTHORIZED REUSE OF THE DRAWINGS AND ELECTRONIC DATA BY THE OWNER OR ITS CONSULTANTS.

KEY PLAN:



PROJECT:

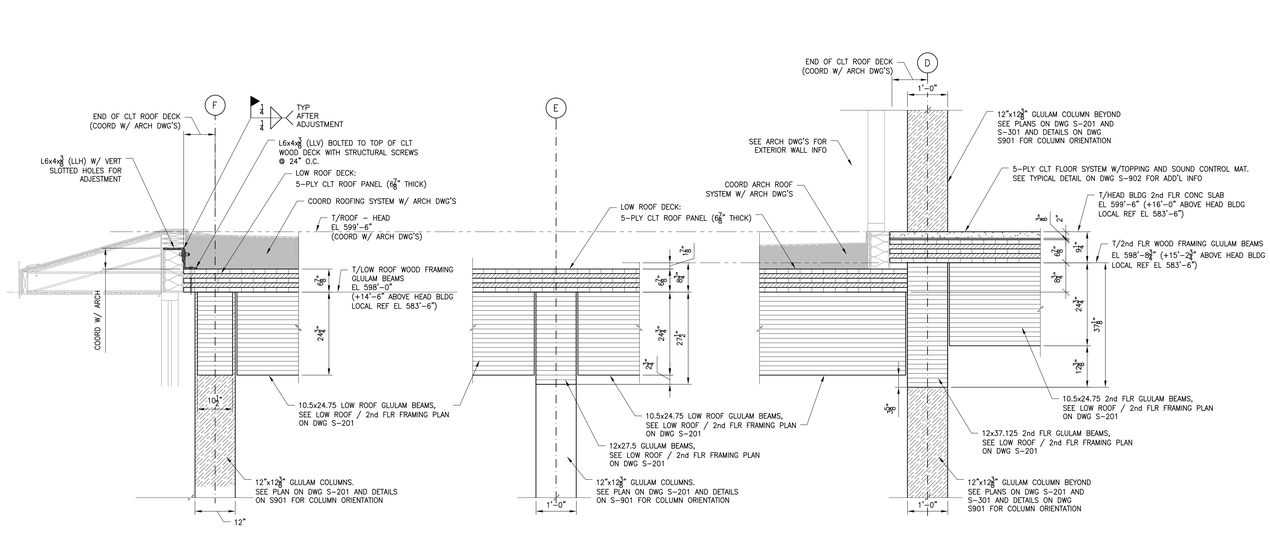
SCIENCE & TECHNOLOGY BUILDING

DRAWING TITLE:

HEAD BUILDING – WOOD FRAMING SECTIONS AND DETAILS

PROJECT NO: 23000	DATE: 9/23/2025
PHASE: REBID & CONSTRUCTION	SCALE: AS NOTED

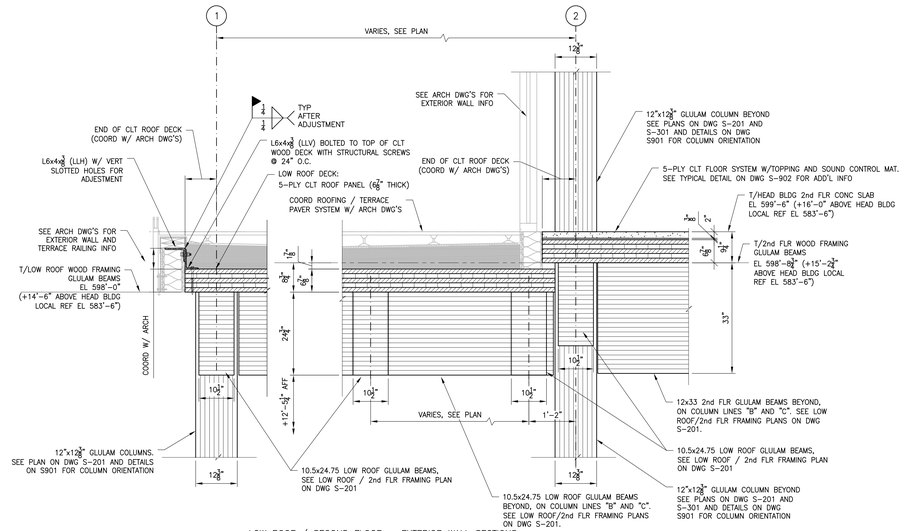
S-902



LOW ROOF / SECOND FLOOR – EXTERIOR WALL SECTIONS

NOTES:
1. SEE DRAWING S-902 FOR TYPICAL WOOD FRAMING SECTIONS AND DETAILS FOR ADD'L INFO, INCLUDING MEMBER TO MEMBER CONNECTIONS (NOT SHOWN)

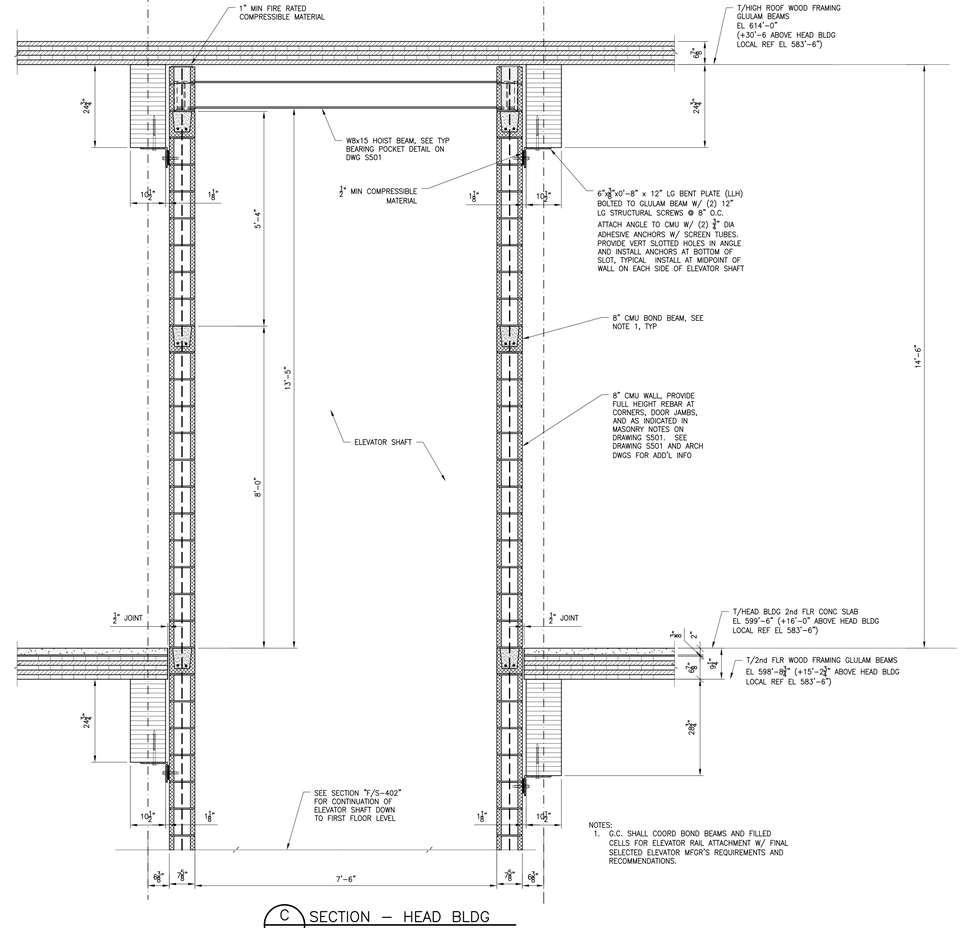
A S-903 SECTION – HEAD BLDG 3/4"=1'-0"



LOW ROOF / SECOND FLOOR – EXTERIOR WALL SECTIONS AT TERRACE

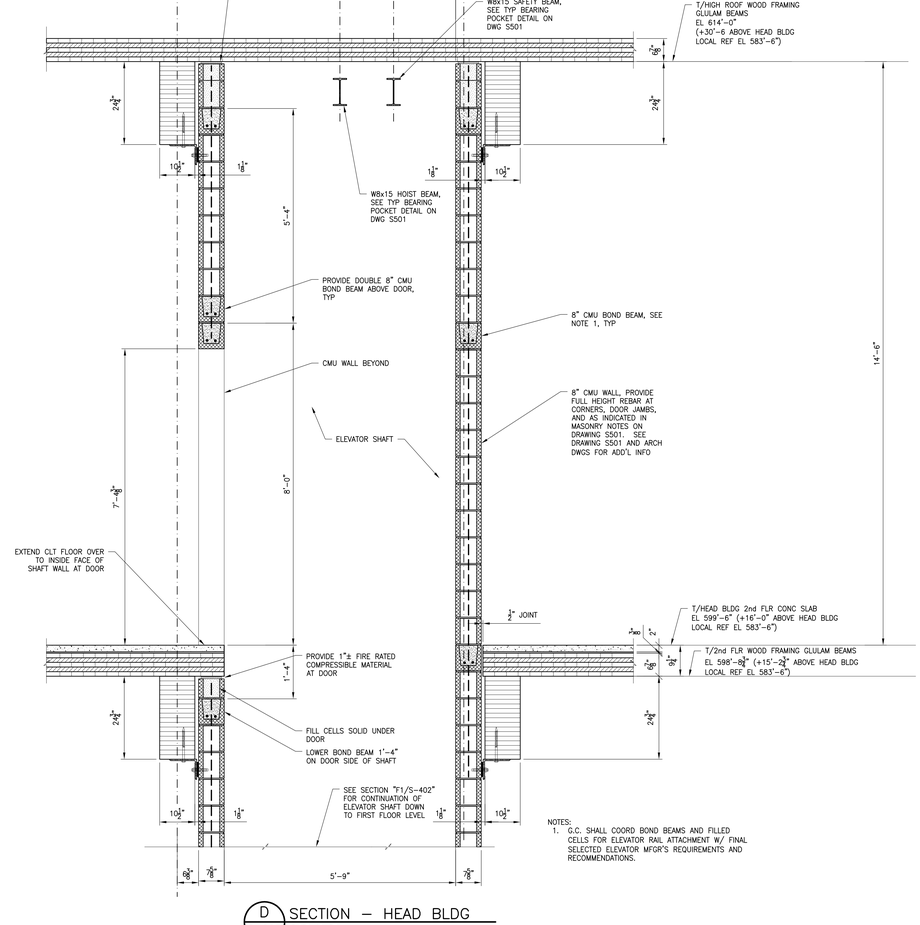
NOTES:
1. SEE DRAWING S-902 FOR TYPICAL WOOD FRAMING SECTIONS AND DETAILS FOR ADD'L INFO, INCLUDING MEMBER TO MEMBER CONNECTIONS (NOT SHOWN)

B S-903 SECTION – HEAD BLDG 3/4"=1'-0"



NOTES:
1. G.C. SHALL COORD BOND BEAMS AND FILLED CELLS FOR ELEVATOR RAIL ATTACHMENT W/ FINAL SELECTED ELEVATOR MFGR'S REQUIREMENTS AND RECOMMENDATIONS.

C S-903 SECTION – HEAD BLDG 3/4"=1'-0"



NOTES:
1. G.C. SHALL COORD BOND BEAMS AND FILLED CELLS FOR ELEVATOR RAIL ATTACHMENT W/ FINAL SELECTED ELEVATOR MFGR'S REQUIREMENTS AND RECOMMENDATIONS.

D S-903 SECTION – HEAD BLDG 3/4"=1'-0"

ONEIDA COUNTY NEW YORK 1798

MVCC
MOHAWK VALLEY COMMUNITY COLLEGE
1101 SHERMAN DRIVE
UTICA, NY 13501
(315) 792-5400

ARCHITECT:
MARCH ASSOCIATES ARCHITECTS & PLANNERS, PC
258 Genesee Street, Suite 300
Utica, New York 13501
315 733 3344

Mitchell Giurgola
Mitchell Giurgola Architects LLP
630 Ninth Avenue, Suite 711
New York, New York 10036
212 663 4000

STRUCTURAL ENGINEER:
Interactive Engineering Solutions, PC
1721 Black River Blvd, Suite L-1
Rome, NY 13440
315 339 7855
IE Solutions
Interactive Engineering Solutions, PC
Interactive Engineering Solutions P.C.
Certificate of Authorization No. 0922543
Expiration Date: 11/30/2027

MEP ENGINEER:
Towne Engineering
18 South Street
Utica, NY 13501
315 733 9000

SITE | CIVIL ENGINEER:
Appel Osborne Landscape Architecture
102 West Division Street, Suite 100
Syracuse, NY 13204
315 476 1022

SEAL:

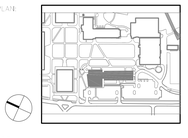
Douglas R. Cahill, PE
NYS Professional Engineer No. 61675
Expiration Date 3/31/2026

ISSUE/REVISION:

NO.	DATE	COMMENTS
1	9/23/25	REBID & CONSTRUCTION

COPYRIGHT © 2018 MITCHELL GIURGOLA ARCHITECTS LLP
ALL DRAWINGS, SPECIFICATIONS, COMPUTER DISKS, OR OTHER MEDIA ARE AND SHALL REMAIN THE PROPERTY OF THE ARCHITECT AND THE DESIGN CONSULTANTS AND ARE NOT TO BE USED IN WHOLE OR IN PART FOR ANY PURPOSE OR PROJECT WITHOUT THE WRITTEN AUTHORIZATION OF THE ARCHITECT AND THE DESIGN CONSULTANTS.

KEY PLAN:



PROJECT:

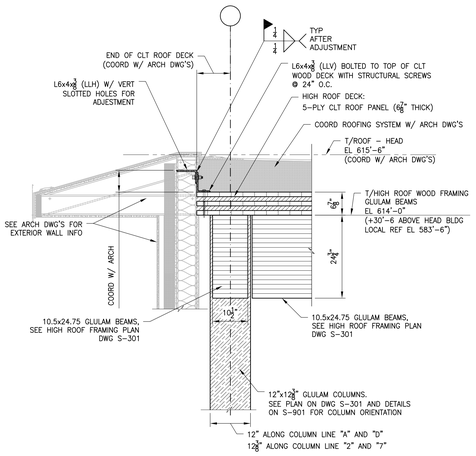
SCIENCE & TECHNOLOGY BUILDING

DRAWING TITLE:

HEAD BUILDING – WOOD FRAMING SECTIONS

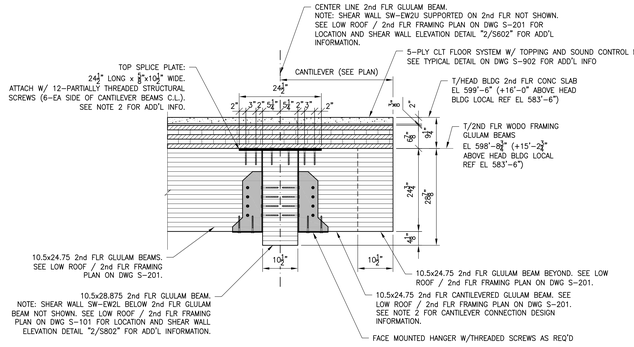
PROJECT NO: 23000 | DATE: 9/23/2025
PHASE: REBID & CONSTRUCTION | SCALE: AS NOTED

S-903



TYPICAL EXTERIOR WALL
HIGH ROOF

A S-904 SECTION – HEAD BLDG
3/4"=1'-0"



SECOND FLOOR CANTILEVER BEAM AT STAIR "A" OPENING

NOTES:
1. SEE DRAWING S-902 FOR TYPICAL WOOD FRAMING SECTIONS AND DETAILS FOR ADD'L INFO, INCLUDING MEMBER TO MEMBER CONNECTIONS (NOT SHOWN)
2. THE HANGER CONNECTION SHOWN IS A GRAPHIC REPRESENTATION OF THE GENERAL DESIGN INTENT. THE END CONNECTION FOR THE FASTENING OF THE 10.5 X 24.75 CANTILEVER GLULAM BEAM TO THE FACE OF THE SUPPORTING 10.5 X 28.75 GLULAM BEAM SHALL BE DESIGNED FOR THE FOLLOWING UN-FACTORED GRAVITY LOADS:
   – V (VERTICAL SHEAR) = 1300 LBS
   – M (MOMENT) = 3800 LB-FT

B S-904 SECTION – HEAD BLDG
3/4"=1'-0"

HEAD BUILDING – DESIGN PARAMETERS AND NOTES:

DESIGN PARAMETERS – HEAD BUILDING

D-1 REFERENCE BUILDING CODE: 2020 BUILDING CODE OF NEW YORK STATE (BCNYS)
NOVEMBER 2019

D-2 LIVE LOADS:

a) HIGH ROOF LIVE LOAD = 20 PSF
b) LOW ROOF W/ ASSEMBLY = 100 PSF
c) FLOORS:
1. SLABS ON GRADE = 100 PSF
2. SECOND FLOOR SLAB = 100 PSF
3. MECHANICAL ROOM FLOOR = 150 PSF

D-3 ROOF SNOW LOAD:

a) GROUND SNOW LOAD (Pg) = 60 PSF
b) FLAT-ROOF SNOW LOAD @ HEATED SPACE (Pf) = 46.2 PSF
(PLUS DRIFTED SNOW)
c) SNOW EXPOSURE FACTOR (Ce) = 1.0
d) SNOW IMPORTANCE FACTOR (Is) = 1.1
e) THERMAL FACTOR @ HEATED SPACE (Ct) = 1.0
f) RISK CATEGORY III (BCNYS REFERENCE CODE TABLE 1604.5/ASCE 7-16
g.1) SNOW DRIFT SURCHARGE (Pd) – HEAD BLDG LOW ROOF (WEST OF COL LINE "D" = 90 PSF AT THE FACE OF THE WALL WITH A TRIANGULAR DISTRIBUTION OVER 12'-0" ONTO THE LOW ROOF, SUPERIMPOSED ON THE FLAT-ROOF BALANCED SNOW LOAD (Pf) PER ASCE 7-16, APPLICABLE FOR THE LOW ROOF AFFECTED BY THE HIGHER ROOF.
g.2) SNOW DRIFT SURCHARGE (Pd) – HEAD BLDG LOW ROOF (NORTH OF COL LINE "2") = 100 PSF WITH A UNIFORM DISTRIBUTION OVER THE ENTIRE AREA OF THE LOW ROOF, SUPERIMPOSED ON THE FLAT-ROOF BALANCED SNOW LOAD (Pf) PER ASCE 7-16, APPLICABLE FOR THE LOWER ROOF AFFECTED BY THE HIGH ROOF.
h) ROOF DESIGN SNOW LOAD (BALANCED SNOW) = 46.2 PSF

D-4 WIND LOAD

a) WIND SPEED (3-SECOND GUST),
V = 120 MPH (BASIC WIND SPEED, BCNYS FIGURE 1609.3 (2), RISK CATEGORY III)
V ASD = 93 MPH (BCNYS TABLE 1609.3.1 AND EQUATION 16-33)
b) RISK CATEGORY III (BCNYS TABLE 1604.5/ASCE 7-16)
c) WIND EXPOSURE CATEGORY B
d) INTERNAL PRESSURE COEFFICIENT (GCpi) = +/- 0.18
e) COMPONENTS AND CLADDING: POSITIVE (+) = INWARD PRESSURE
NEGATIVE (–) = OUTWARD PRESSURE (SUCTION)

WALLS:	+20 PSF, –24 PSF WITHIN 6.5 FT OF CORNERS
	+20 PSF, –20 PSF ELSEWHERE
ROOF:	+10 PSF, –45 PSF WITHIN 6.5 FT OF CORNERS AND EDGE
	+10 PSF, –18 PSF ELSEWHERE

D-5 EARTHQUAKE LOADS

a) RISK CATEGORY III (BCNYS REFERENCE CODE TABLE 1604.5/ASCE 7-16)
b) SEISMIC IMPORTANCE FACTOR: Ie=1.25
c) SITE CLASS: SITE CLASS "C" (PER GEOTECH REPORT)
d) SPECTRAL RESPONSE COEFFICIENTS:
SMS=0.230G SS=0.177G
SM1=0.086G S1=0.057G
SDS=0.153G FA=1.3
SD1=0.057G FV=1.5
e) SEISMIC DESIGN CATEGORY: DESIGN CATEGORY "A"

CROSS-LAMINATED TIMBER (CLT) NOTES:

1. ALL CROSS-LAMINATED TIMBER (CLT) WORK SHALL CONFORM TO THE FOLLOWING GOVERNING STANDARDS, LATEST EDITIONS:
   A. NDS "NATIONAL DESIGN SPECIFICATION FOR WOOD CONSTRUCTION
   B. ANSI/APA PRG 320 "STANDARD FOR PERFORMANCE-RATED CROSS-LAMINATED TIMBER"
2. THE PROJECT'S CLT MANUFACTURER SHALL BE CERTIFIED IN ACCORDANCE WITH ANSI/APA PRG 320. SUBMIT CERTIFICATION FOR REVIEW AND APPROVAL BY THE DESIGN TEAM PRIOR TO FABRICATION.
3. CONFIRM ALL DIMENSIONS, OUTLINES, ELEVATIONS, AND DETAILS WITH ARCHITECTURAL DRAWINGS. COORDINATE ALL DIMENSIONS WITH MATERIALS AND ELEMENTS PROVIDED BY OTHER TRADES. CONTRACTOR TO FIELD VERIFY ALL DIMENSIONS IN THE FIELD PRIOR TO PREPARATION OF SHOP DRAWINGS.
4. ALL CLT PANELS SHALL CONSIST OF CROSSWISE STACKED AND GLUED TOGETHER LAYERS OF PLANKS, BONDING SHALL BE CARRIED OUT EXCLUSIVELY WITH APPROVED ADHESIVES, CONFORMING TO ANSI 405 AS MODIFIED BY ANSI/APA PRG 320.
5. ALL PLANKS USED WITHIN CLT PANELS ARE TO BE STRESS AND QUALITY GRADED AND MACHINE DRIED PER NDS AND ANSI/APA PRG 320 STANDARDS, WITH THE LONGITUDINAL LAYERS COMPRISING THE MAJOR STRENGTH DIRECTION.
6. ALL SAWN LUMBER LAMINATIONS IN CLT FLOOR SLAB SHALL CONFORM TO THE FOLLOWING MINIMUM STANDARDS, TYP U.O.N.:
   A. LUMBER SPECIES: SOFTWOOD SPECIES OR SPECIES COMBINATION RECOGNIZED BY THE AMERICAN LUMBER STANDARDS COMMITTEE (ALSC) UNDER PS 20 WITH A MINIMUM PUBLISHED SPECIFIC GRAVITY OF 0.35 AS PUBLISHED WITHIN THE NDS.
   B. LONGITUDINAL LAYER LUMBER GRADE: 1200F-1.2E MSR OR VISUAL GRADE NO. 2
   C. TRANSVERSE LAYER LUMBER GRADE: VISUAL GRADE NO. 3
7. ALL FLOOR AND ROOF PANELS SHALL BE ORIENTED WITH THE EXTERIOR LONGITUDINAL LAYER AS INDICATED ON PLAN, TYPICAL U.O.N.
8. THE MAXIMUM MOISTURE CONTENT OF THE SAWN LUMBER LAMINATION LAYERS DURING PANEL MANUFACTURING SHALL BE 12% (+/- 3%). LOWER LAMINATION MOISTURE CONTENTS SHALL BE PERMITTED IF THE ADHESIVE BOND PERFORMANCE MEETS THE QUALIFICATIONS OUTLINED IN ANSI/APA PRG 320.
9. ALL PANEL SURFACES, APPEARANCE GRADE, AND FINISHES SHALL BE IN ACCORDANCE WITH ARCHITECTURAL AND STRUCTURAL REQUIREMENTS. SEE ARCHITECTURAL DRAWINGS AND SPECIFICATIONS FOR FINISH REQUIREMENTS. WHERE ARCHITECTURAL APPEARANCE CLASSIFICATION PANELS ARE SPECIFIED, CONTRACTOR TO PROVIDE A 24"X24" SAMPLE WITH SHOP-APPLIED SEALER FOR EACH TYPE FOR REVIEW AND APPROVAL.
10. PROVIDE CONNECTIONS AS DETAILED ON THE STRUCTURAL DRAWINGS, INCLUDE SECTIONS AND TYPICAL DETAILS. THESE SHALL BE DESIGNED BY A PROFESSIONAL ENGINEER LICENSED IN THE STATE OF NEW YORK AND JURISDICTION WORKING FOR THE CLT MANUFACTURER. DRAWINGS AND CALCULATIONS OF CONNECTIONS DESIGNED BY THE CLT FABRICATOR AND THEIR ENGINEER SHALL BE SIGNED AND SEALED BY THE PROFESSIONAL ENGINEER LICENSED IN THE STATE OF NEW YORK. SUBMIT CALCULATIONS FOR REVIEW AND APPROVAL BY THE DESIGN TEAM PRIOR TO FABRICATION.
11. SUBMIT SHOP DRAWINGS OUTLINING FABRICATION AND ERECTION OF ALL CLT PANELS FOR REVIEW AND APPROVAL BY THE DESIGN TEAM PRIOR TO FABRICATION. SHOP DRAWINGS SHALL INCLUDE ALL PANEL SIZE, GEOMETRY, COMPOSITION, CONNECTIONS, DETAILS, MATERIAL SPECIFICATIONS, AND FINISHES. ERECTION DRAWINGS SHALL INCLUDE A LAYOUT FOR ALL PANELS.
12. PANELS MUST BE CONSTANTLY PROTECTED FROM THE WEATHER DURING TRANSPORTATION, STORAGE, AND ERECTION.
   A. PANELS TO BE WRAPPED WITH A WATER-RESISTANT COVERING (INCLUDING SEAMS). ON THE UNDERSIDE OF THE COVERING, PROVIDE A SLIT TO PREVENT MOISTURE ACCUMULATION WITH THE WRAPPING.
   B. STORE PANELS OFF THE GROUND AND USE SPACERS TO ALLOW FOR AIR CIRCULATION ON ALL PANEL FACES.
   C. CONTRACTOR IS RESPONSIBLE FOR TAKING APPROPRIATE MEASURES TO MINIMIZE DAMAGE TO PANELS, INCLUDING PANEL STAINING, CRACKING, DISTORTION, AND WARPING.
13. ONE COAT OF SEALER SHALL BE APPLIED TO ARCHITECTURAL FACE OF PANEL. SUBMIT PROPOSED SEALER FOR REVIEW AND APPROVAL BY THE DESIGN TEAM.
14. WHEN CLT ELEMENTS ARE IN CONTACT WITH CONCRETE OR MASONRY CONSTRUCTION ELEMENTS, A MOISTURE BARRIER MUST BE PROVIDED TO PROTECT THE TIMBER ELEMENTS FROM ASCENDING MOISTURE.
15. CLT PANELS SHALL BE ERECTED AND INSTALLED IN CONFORMANCE WITH MANUFACTURER REQUIREMENTS. MARK ALL PANELS FOR IDENTIFICATION DURING ERECTION, INCLUDING IDENTIFICATION OF TOP SURFACE. ENSURE THAT MARKS ARE NOT COMPLETED ON EXPOSED-TO-VIEW PANEL SURFACES. ALL PANELS SHALL BE LIFTED AND SUPPORTED FROM DESIGNATED POINTS SHOWN IN THE APPROVED SHOP DRAWINGS.
16. PANELS TO BE ERECTED AND PLACED IN THE FIELD WITHOUT TRIMMING, CUTTING, OR OTHER MODIFICATIONS, UNLESS APPROVED BY THE DESIGN TEAM. SITE CUTTING OR BORING OF PANELS NOT SHOWN ON THE APPROVED SHOP DRAWINGS IS NOT PERMITTED WITHOUT WRITTEN CONSENT FROM THE DESIGN TEAM. SHOULD APPROVED FIELD MODIFICATIONS BE REQUIRED, COAT ALL FIELD-CUT OPENINGS WITH TWO LAYERS OF SEALER.
17. ALL CLT PANELS SHALL BE ADEQUATELY BRACED AND SUPPORTED UNTIL ALL STRUCTURAL DIAPHRAGMS AND PERMANENT STRUCTURAL ELEMENTS ARE INSTALLED AND CONNECTED.
18. ANY SUBSTITUTIONS OF CLT ELEMENTS MUST HAVE WRITTEN APPROVAL OF THE DESIGN TEAM PRIOR TO SUBMISSION OF SHOP DRAWINGS OR FABRICATION. IF CLT PANELS DEVIATE FROM CONTRACT DOCUMENTS, CLT MANUFACTURER TO PROVIDE SIGNED AND SEALED DRAWINGS AND CALCULATIONS TO ENSURE THAT THE VARIANCE MEETS ALL STRUCTURAL, FIRE, AND ARCHITECTURAL REQUIREMENTS TO THE SATISFACTION OF THE DESIGN TEAM.
19. STRUCTURAL STEEL FOR ALL CONNECTION SHALL CONSIST OF ASTM A36 UNLESS OTHERWISE NOTED. ALL STEEL COMPONENTS FOR PANEL-TO-PANEL CONNECTIONS MUST BE TEST-FITTED AT THE MANUFACTURING FACILITY PRIOR TO SHIPMENT. FOR EXTERIOR APPLICATIONS, ALL STEEL CONNECTION ELEMENTS MUST BE HOT-DIPPED GALVANIZED OR COMPOSED OF STAINLESS STEEL.
20. CONTRACTOR TO SUPPLY REPRESENTATIVE MOCKUP OF MIN 200 SF OF CLT FOR REVIEW BY DESIGN TEAM. CLT TO MATCH SPECIES, VISUAL GRADE, FASTENER ARRANGEMENT, AS NOTED IN THESE DOCUMENTS.

GLUED LAMINATED TIMBER (GLULAM) NOTES:

1. ALL GLULAM WORK SHALL CONFORM TO THE FOLLOWING GOVERNING STANDARDS:
   A. ANSI/AWC NDS
   B. ANSI A190.1
2. CONNECTIONS SHALL BE DESIGNED BY A PROFESSIONAL ENGINEER LICENSED IN THE STATE OF NEW YORK RETAINED BY THE TIMBER FABRICATOR AND EXPERIENCED IN THE DESIGN OF MASS TIMBER CONNECTIONS. DRAWINGS AND CALCULATIONS OF COMPONENTS DESIGNED BY THE TIMBER FABRICATOR SHALL BE SIGNED AND SEALED BY THE PROFESSIONAL ENGINEER LICENSED IN THE STATE OF NEW YORK. UNLESS OTHERWISE NOTED ON PLAN, PROVIDE CONNECTIONS BASED ON MINIMUM SHEAR CAPACITY REQUIREMENTS IN THE TABLE ON EACH FLOOR PLAN.
3. ANY CONNECTIONS WITH STEEL HARDWARE SHALL UTILIZE EXPOSED CONNECTIONS AS MUCH AS POSSIBLE. REFER TO TYPICAL DETAILS ON DWG S-902 FOR CONCEPTUAL INFORMATION.
4. SHOP AND ERECTION DRAWINGS SHALL BE SUBMITTED TO STRUCTURAL ENGINEER FOR REVIEW AND APPROVAL. NO FABRICATION OF GLULAM FRAMING SHALL COMMENCE WITHOUT APPROVED SHOP DRAWINGS. SHOP DRAWINGS TO SHOW ALL CONNECTIONS AND DETAILS, MATERIAL SPECIFICATIONS, FINISHES, AND AN ERECTION LAYOUT FOR ALL MEMBERS.
5. GLULAM MANUFACTURER SHALL BE CERTIFIED IN ACCORDANCE WITH ANSI A190.1.
6. ALL NECESSARY PRECAUTIONS SHOULD BE TAKEN TO KEEP FRAMING DRY AND PROTECTED FROM UV LIGHT DURING AND AFTER INSTALLATION.
7. GLULAM MEMBERS TO BE INDIVIDUALLY WRAPPED USING PLASTIC-COATED PAPER COVERING WITH WATER-RESISTANT SEAMS. SLIT THE WRAP ON THE UNDERSIDE OF THE MEMBERS WHILE THEY ARE BEING STORED ON THE BUILDING SITE.
8. GLULAM MEMBERS IN DELIVERY TO BE STORED ON BLOCKS OF WOOD TO AVOID DIRECT CONTACT WITH THE GROUND. SEPARATE THEM WITH SPACER TO ALLOW AIR TO MOVE FREELY ON ALL SIDES.
9. GLULAM MEMBERS TO MEET THE FOLLOWING SPECIFICATIONS. ANY SUBSTITUTION MUST BE APROVED BY THE ENGINEER AND ARCHITECT.
   A. BASIS OF DESIGN: GLULAM COLUMNS:
   -VISUALLY GRADED SOUTHERN PINE
   -COMBINATION SYMBOL: 47 1:8
   -UNIFORM GRADE LAYOUT: N2M
   -STANDARD DEPTHS IN STANDARD LAMINATION THICKNESS = 1⅜"
   B. BASIS OF DESIGN: – GLULAM BEAMS:
   -VISUALLY GRADED SOUTHERN PINE (OUTER / CORE)
   -COMBINATION SYMBOL: 24F-V3
   -UNBALANCED LAYUP
   -STANDARD DEPTHS IN STANDARD LAMINATION THICKNESS = 1⅜"

C.	ADHESIVE	–	AITC405
D.	APPEARANCE CLASSIFICATION	–	ARCHITECTURAL WERE EXPOSED AS DEFINED IN AITC 110
E.	SEALER	–	PER MANUFACTURER STANDARD – TO BE TRANSPARENT AND COMPATIBLE WITH FINISH

10. FIELD CUTTING OR BORING OF MEMBERS IS NOT PERMITTED WITHOUT APPROVAL BY ENGINEER AND ARCHITECT. COAT ALL FIELD-CUT OPENINGS WITH MINIMUM OF TWO COATS OF CLEAR SEALER.
11. PROVIDE 24" LONG SAMPLES OF ARCHITECTURAL APPEARANCE GRADE MEMBER WITH SHOP-APPLIED SEALER FOR REVIEW BY ENGINEER AND ARCHITECT
12. WHEN GLULAM MEMBERS ARE IN CONTACT WITH CONCRETE OR MASONRY CONSTRUCTION ELEMENTS, A MOISTURE BARRIER MUST BE PROVIDED TO PROTECT THE TIMBER ELEMENTS.
13. SEE ARCHITECTURAL DOCUMENTS FOR FIRE RATING INFORMATION.
14. PROVIDE DOUBLE COAT OF END SEALER AT ALL CROSS CUT SURFACES.
15. AT ALL EXTERIOR MEMBERS PROVIDE A SHOP-APPLIED 1/2" THICK END CAP OF MATCHING WOOD MATERIAL GLUED TO END FACE. SHOP APPLY THREE COATS OF SEALANT TO ALL SIDES AND END CAPS OF MEMBERS WHEN EXPOSED TO RAIN OF MOISTURE.
16. GLULAM MEMBERS SHALL BE ERECTED AND INSTALLED IN CONFORMANCE WITH MANUFACTURER REQUIREMENTS. MARK ALL MEMBERS FOR IDENTIFICATION DURING ERECTION INCLUDING IDENTIFICATION OF TOP SURFACE. ENSURE THAT ALL MARKS ARE NOT COMPLETED ON EXPOSED SURFACES.
17. ALL GLULAM BEAMS SHALL BE ADEQUATELY BRACED AND SUPPORTED UNTIL ALL STRUCTURAL DIAPHRAGMS AND PERMANENT STRUCTURAL ELEMENTS ARE INSTALLED AND CONNECTED.

ONEIDA COUNTY NEW YORK 1798

MVCC
MOHAWK VALLEY COMMUNITY COLLEGE
1101 SHERMAN DRIVE
UTICA, NY 13501
(315) 792-5400

ARCHITECT:
MA MARCH ASSOCIATES
ARCHITECTS & PLANNERS, PC
258 Genesee Street, Suite 300
Utica, New York 13501
315 733 3344

Mitchell Giurgola
Mitchell Giurgola Architects LLP
630 Ninth Avenue, Suite 711
New York, New York 10036
212 663 4000

STRUCTURAL ENGINEER:
Interactive Engineering Solutions, PC
1721 Black River Blvd, Suite L-1
Rome, NY 13440
315 339 7855
IE Solutions
Interactive Engineering Solutions P.C.
Certificate of Authorization No. 0522543
Expiration Date: 11/30/2027

MEP ENGINEER:
Towne Engineering
18 South Street
Utica, NY 13501
315 733 9000

SITE | CIVIL ENGINEER:
Appel Osborne Landscape Architecture
102 West Division Street, Suite 100
Syracuse, NY 13204
315 476 1022

SEAL:



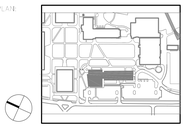
Douglas P. Cahill, PE
NYS Professional Engineer No. 61675
Expiration Date 3/31/2026

ISSUE/REVISION:

NO.	DATE	COMMENTS
1	9/23/25	REBID & CONSTRUCTION

COPYRIGHT © 2018 MITCHELL GIURGOLA ARCHITECTS LLP
THE DRAWINGS AND DIGITAL CONTENTS SHALL BE USED ONLY FOR THE PURPOSES AND PROJECT FOR WHICH THEY WERE PREPARED AND NOT FOR ANY OTHER PURPOSE OR PROJECT, AND SHALL NOT BE REPRODUCED, CHANGED OR COPIED IN ANY FORM OR MANNER WHATSOEVER, NOR SHALL THEY BE ASSIGNED TO ANY THIRD PARTY, WITHOUT FIRST OBTAINING THE WRITTEN PERMISSION AND CONSENT OF MITCHELL GIURGOLA ARCHITECTS LLP. IN THE EVENT OF UNAUTHORIZED REUSE BY OTHERS, MITCHELL GIURGOLA ARCHITECTS LLP SHALL BE INDEMNIFIED AND HELD HARMLESS BY THE USER.

KEY PLAN:



PROJECT:

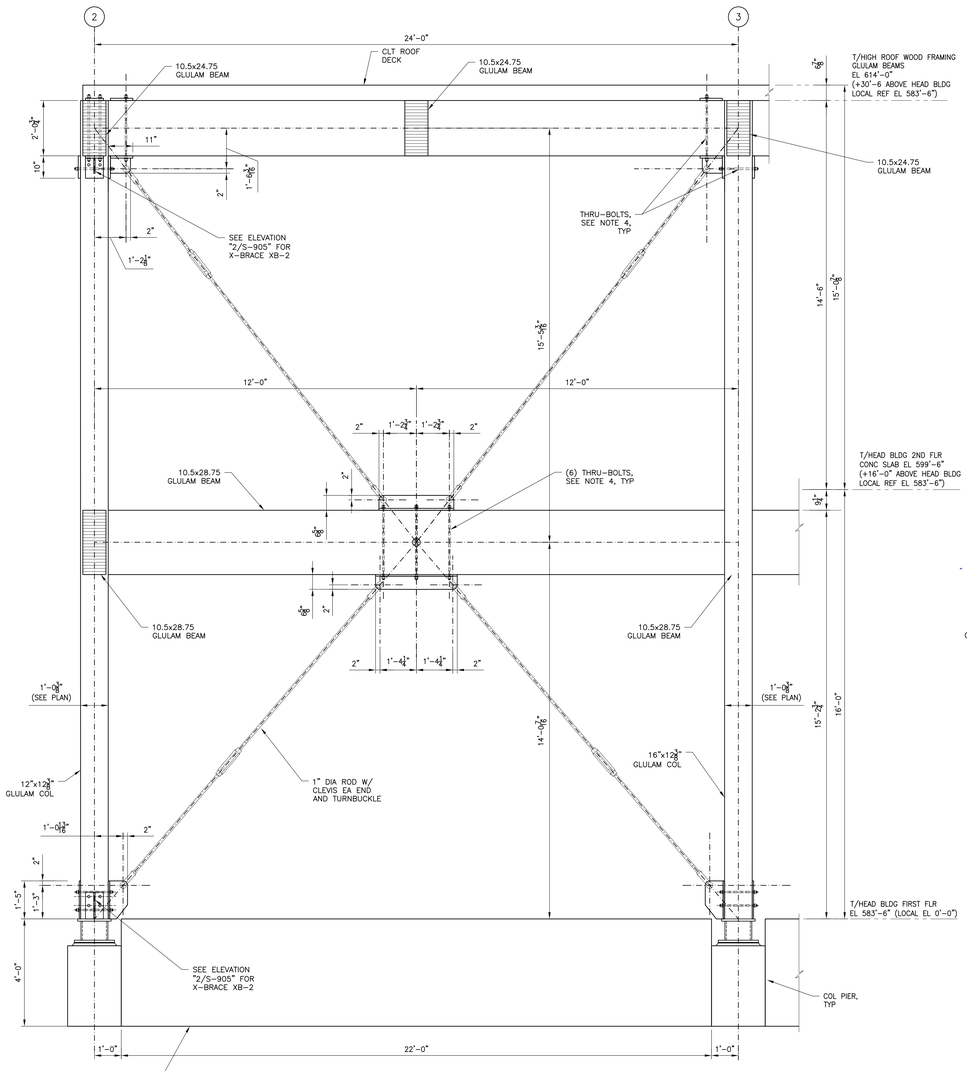
SCIENCE & TECHNOLOGY BUILDING

DRAWING TITLE:

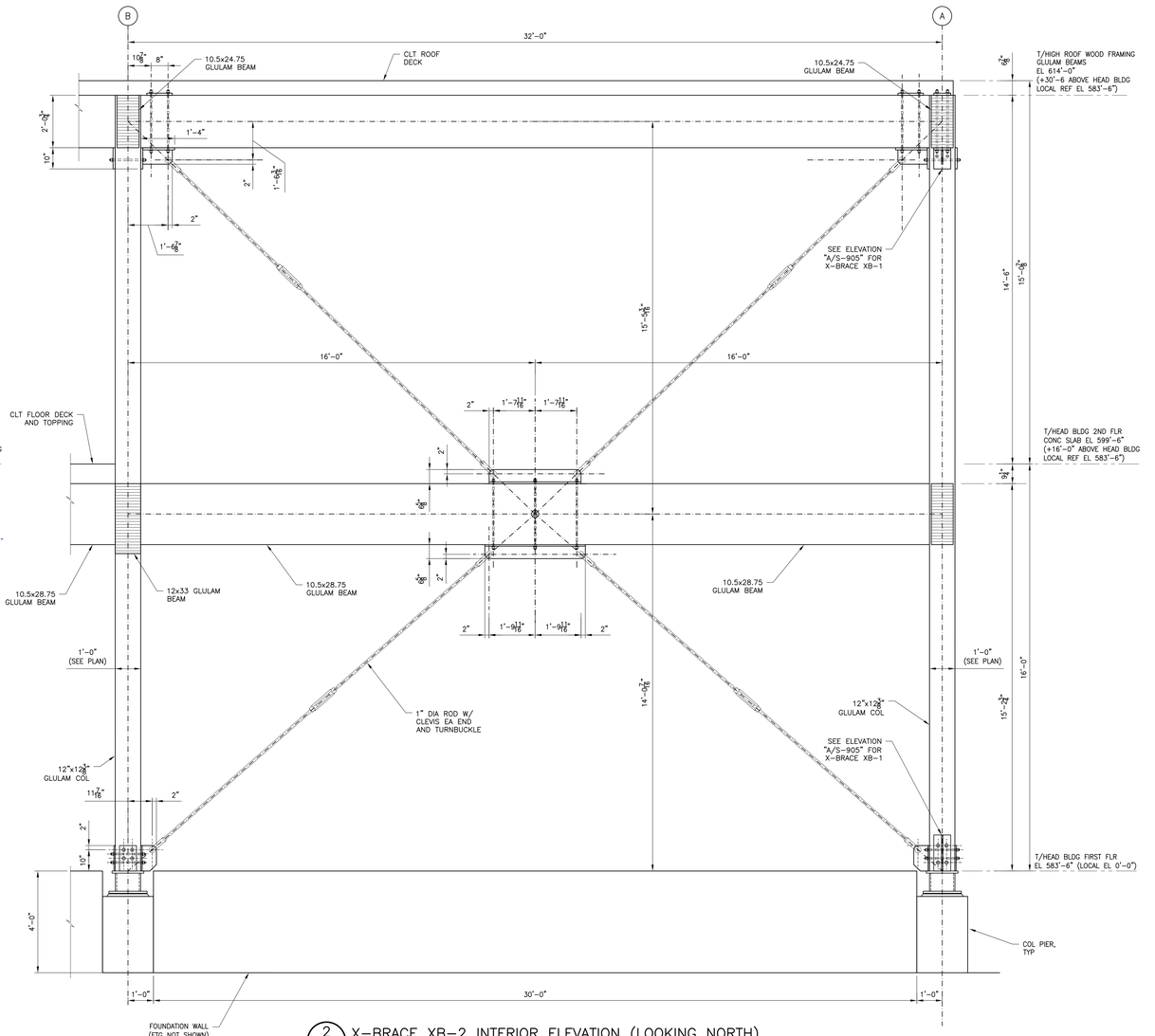
HEAD BUILDING – WOOD FRAMING SECTIONS, DESIGN PARAMETERS AND NOTES

PROJECT NO: 23000 | DATE: 9/23/2025
PHASE: REBID & CONSTRUCTION | SCALE: AS NOTED

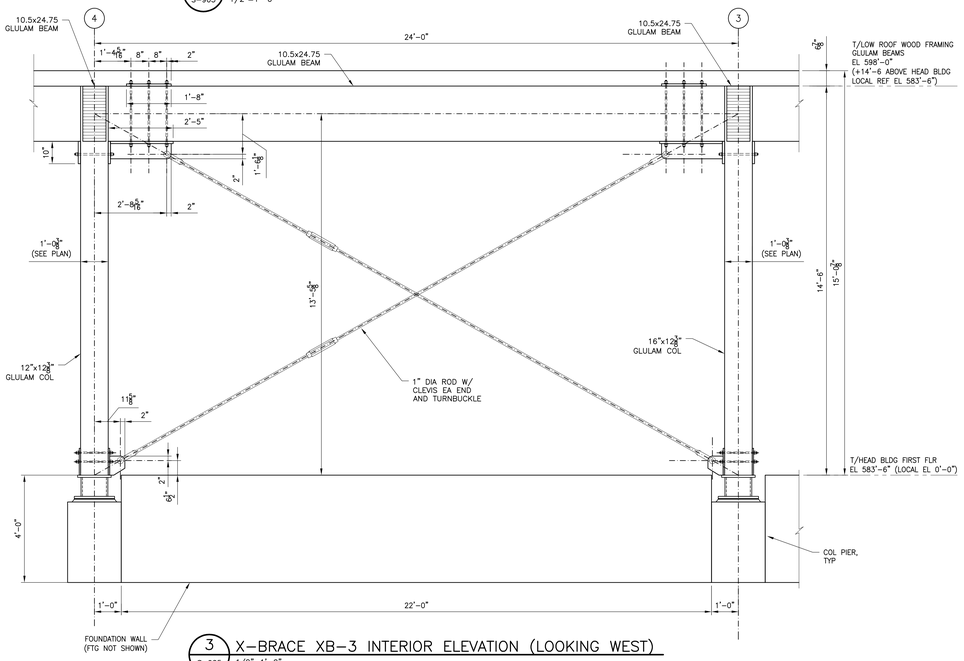
S-904



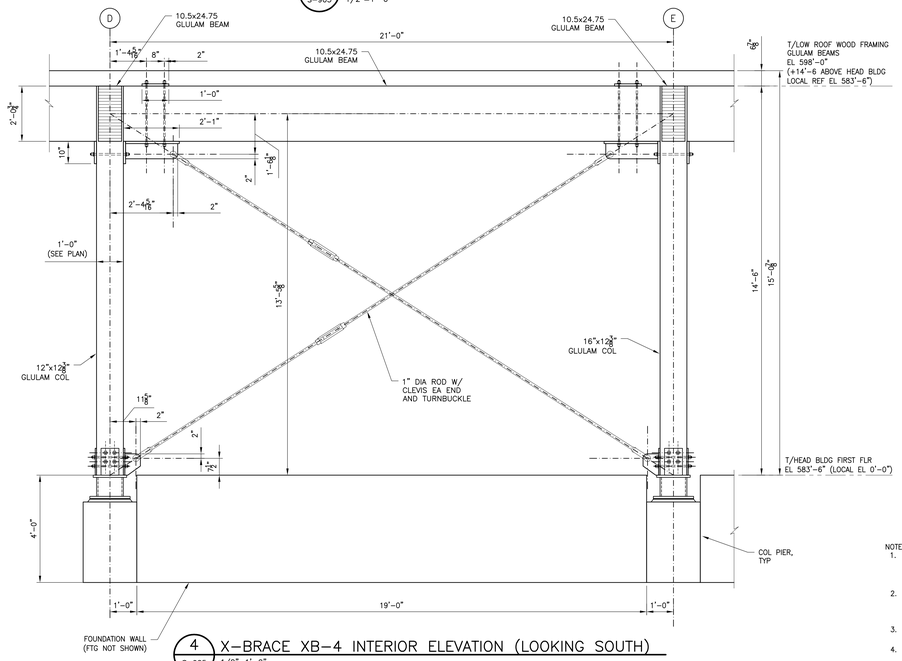
1 S-905 X-BRACE XB-1 INTERIOR ELEVATION (LOOKING EAST)
1/2"=1'-0"



2 S-905 X-BRACE XB-2 INTERIOR ELEVATION (LOOKING NORTH)
1/2"=1'-0"



3 S-905 X-BRACE XB-3 INTERIOR ELEVATION (LOOKING WEST)
1/2"=1'-0"



4 S-905 X-BRACE XB-4 INTERIOR ELEVATION (LOOKING SOUTH)
1/2"=1'-0"

NOTES:
1. SEE DRAWING S-902 FOR TYPICAL WOOD FRAMING SECTIONS AND DETAILS FOR ADD'L INFO. INCLUDING MEMBER TO MEMBER CONNECTIONS (NOT SHOWN).
2. ALL X-BRACE CONNECTION PLATES SHALL BE $\frac{3}{8}$" STEEL PLATES U.O.N., COORD PLATE SIZE AND PIN DIAMETER AT CLEVIS CONNECTION W/ CLEVIS MFGR.
3. COORD PRIME / PAINT FOR X-BRACING W/ ARCH DWGS.
4. ALL THRU BOLTS SHALL BE $\frac{3}{4}$" DIA F1554 THREADED ROD W/ MATCHING NUTS AND PL WASHERS EA SIDE.
5. SEE DRAWING S-901 FOR COLUMN SCHEDULE AND DRAWING S-901.1 FOR BASE PLATE DETAILS AT X-BRACING LOCATIONS.

ONEIDA COUNTY NEW YORK 1798

MVCC
MOHAWK VALLEY COMMUNITY COLLEGE

1101 SHERMAN DRIVE
UTICA, NY 13501
(315) 792-5400

ARCHITECT:

MARCH ASSOCIATES ARCHITECTS & PLANNERS, PC
258 Genesee Street, Suite 300
Utica, New York 13501
315 733 3344

Mitchell Giurgola
Mitchell Giurgola Architects LLP
630 Ninth Avenue, Suite 711
New York, New York 10036
212 663 4000

STRUCTURAL ENGINEER:
Interactive Engineering Solutions, PC
1721 Black River Blvd, Suite L-1
Rome, NY 13440
315 339 7855

IE Solutions
Interactive Engineering Solutions P.C.
Certificate of Authorization No. 0922543
Expiration Date: 11/30/2027

MEP ENGINEER:
Towne Engineering
18 South Street
Utica, NY 13501
315 733 9000

SITE | CIVIL ENGINEER:
Appel Osborne Landscape Architecture
102 West Division Street, Suite 100
Syracuse, NY 13204
315 476 1022

SEAL:

STATE OF NEW YORK DOUGLAS R. CAHILL 61675 LICENSED PROFESSIONAL ENGINEER

Douglas R. Cahill, PE
NYS Professional Engineer No. 61675
Expiration Date 3/31/2026

ISSUES/REVISION:

NO.	DATE	COMMENTS
1	9/23/25	REBID & CONSTRUCTION

COPYRIGHT © 2018 MITCHELL GIURGOLA ARCHITECTS LLP
THESE DRAWINGS ARE NOT TO BE USED UNLESS SIGNED, AND VERIFIED BY THE CONTRACTOR BEFORE ASSUMING ANY RESPONSIBILITY.

KEY PLAN:

PLAN NORTH

PROJECT:

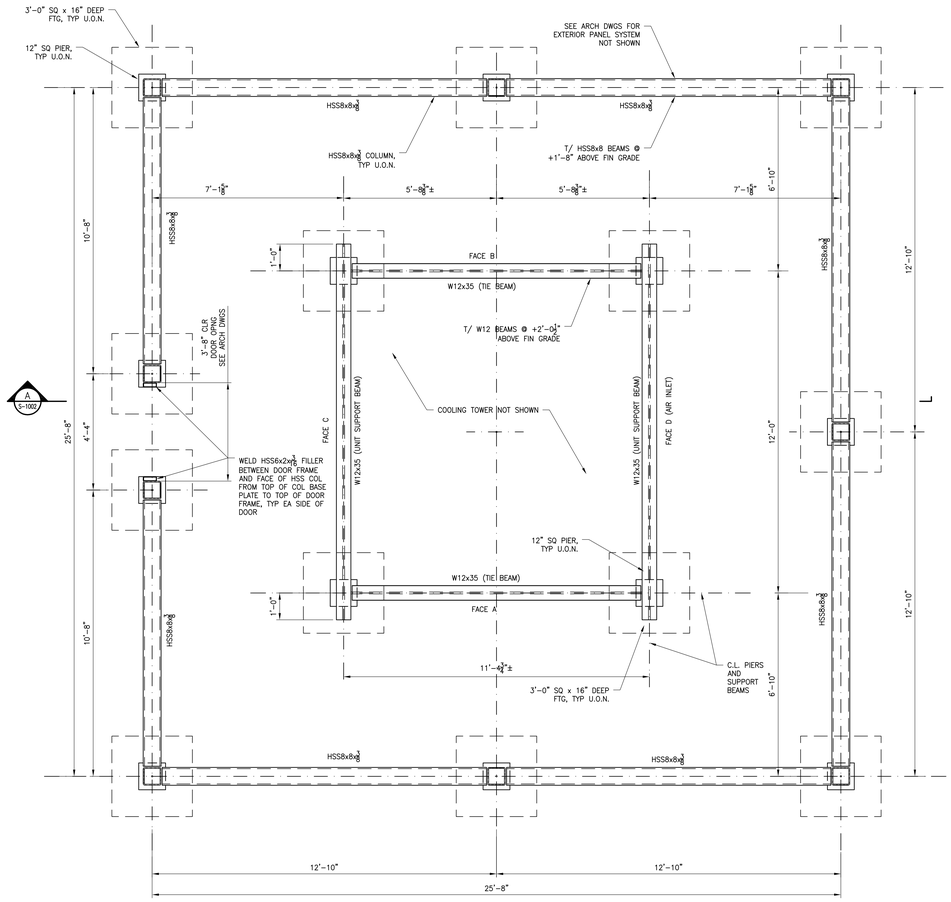
SCIENCE & TECHNOLOGY BUILDING

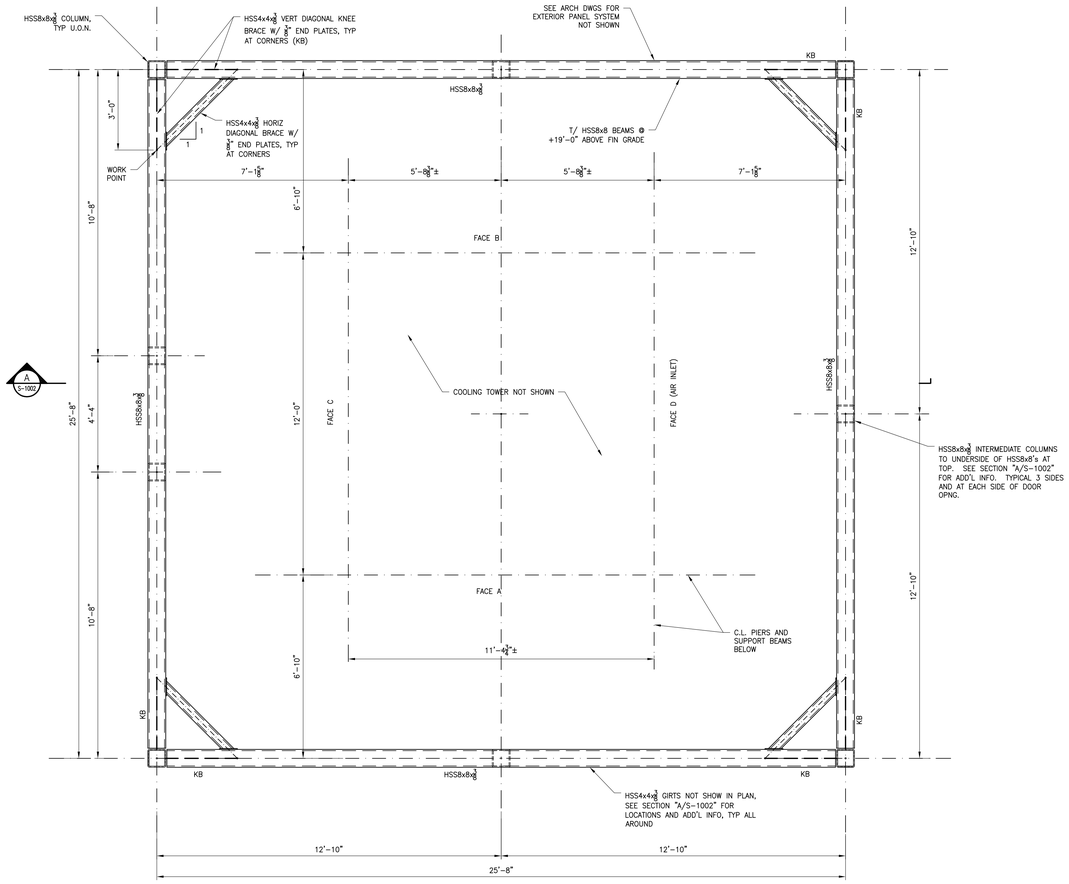
DRAWING TITLE:

HEAD BUILDING – EXTERIOR WALL X-BRACE ELEVATIONS

PROJECT NO: 23000	DATE: 9/23/2025
PHASE: REBID & CONSTRUCTION	SCALE: AS NOTED

S-905





1 S-1001 COOLING TOWER SUPPORT FRAME AND ENCLOSURE FOUNDATION PLAN
1/2"=1'-0"

NOTES:
F-1. REFERENCE DATUM FOR PLAN IS AT FIN GRADE = 0'-0".
F-2. PLAN IS SHOWN AT STEEL FRAMING THAT IS LOCATED JUST ABOVE T/ PIERS.
F-3. T/ PIERS ARE AT ELEVATION +10" ABOVE REF DATUM IN NOTE F-1.
F-4. T/ BASE PLATES ARE AT ELEVATION +1'-0" ABOVE REF DATUM IN NOTE F-1.
F-5. T/ HSS8x8's ARE AT ELEV +1'-8" ABOVE REF DATUM IN NOTE F-1.

2 S-1001 COOLING TOWER SUPPORT FRAME AND ENCLOSURE FRAMING PLAN
1/2"=1'-0"

NOTES:
S-1 REFERENCE DATUM FOR PLAN IS AT FIN GRADE = 0'-0".
S-2. PLAN IS SHOWN AT STEEL FRAMING THAT IS LOCATED AT TOP OF SCREEN WALL, +19'-0" ABOVE REF DATUM IN NOTE S-1.

ONEIDA COUNTY NEW YORK 1798

MVCC
MOHAWK VALLEY COMMUNITY COLLEGE

1101 SHERMAN DRIVE
UTICA, NY 13501
(315) 792-5400

ARCHITECT:

MARCH ASSOCIATES ARCHITECTS & PLANNERS, PC
258 Genesee Street, Suite 300
Utica, New York 13501
315 733 3344

Mitchell Giurgola
Mitchell Giurgola Architects LLP
530 Ninth Avenue, Suite 711
New York, New York 10036
212 663 4000

STRUCTURAL ENGINEER:
Interactive Engineering Solutions, PC
1721 Black River Blvd, Suite L-1
Rome, NY 13440
315 339 7855

IE Solutions
Interactive Engineering Solutions P.C.
Certificate of Authorization No. 0922543
Expiration Date: 11/30/2027

MEP ENGINEER:
Towne Engineering
18 South Street
Utica, NY 13501
315 733 9000

SITE | CIVIL ENGINEER:
Appel Osborne Landscape Architecture
102 West Division Street, Suite 100
Syracuse, NY 13204
315 476 1022

SEAL:

STATE OF NEW YORK DOUGLAS P. CAHILL 81613 LICENSED PROFESSIONAL ENGINEER

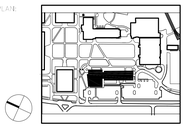
Douglas P. Cahill, PE
NYS Professional Engineer No. 61675
Expiration Date 3/31/2026

ISSUE/REVISION:

NO.	DATE	COMMENTS
1	9/23/25	REBID & CONSTRUCTION

COPYRIGHT © 2018 MITCHELL GIURGOLA ARCHITECTS LLP
ALL DRAWINGS AND DETAILS SHOWN ARE THE PROPERTY OF THE ARCHITECT AND ARE NOT TO BE USED IN ANY WAY WITHOUT THE EXPRESS PERMISSION OF THE ARCHITECT. ALL DIMENSIONS SHALL BE CHECKED AND VERIFIED BY THE CONTRACTOR BEFORE PROCEEDING WITH THE WORK.

KEY PLAN:



PROJECT:

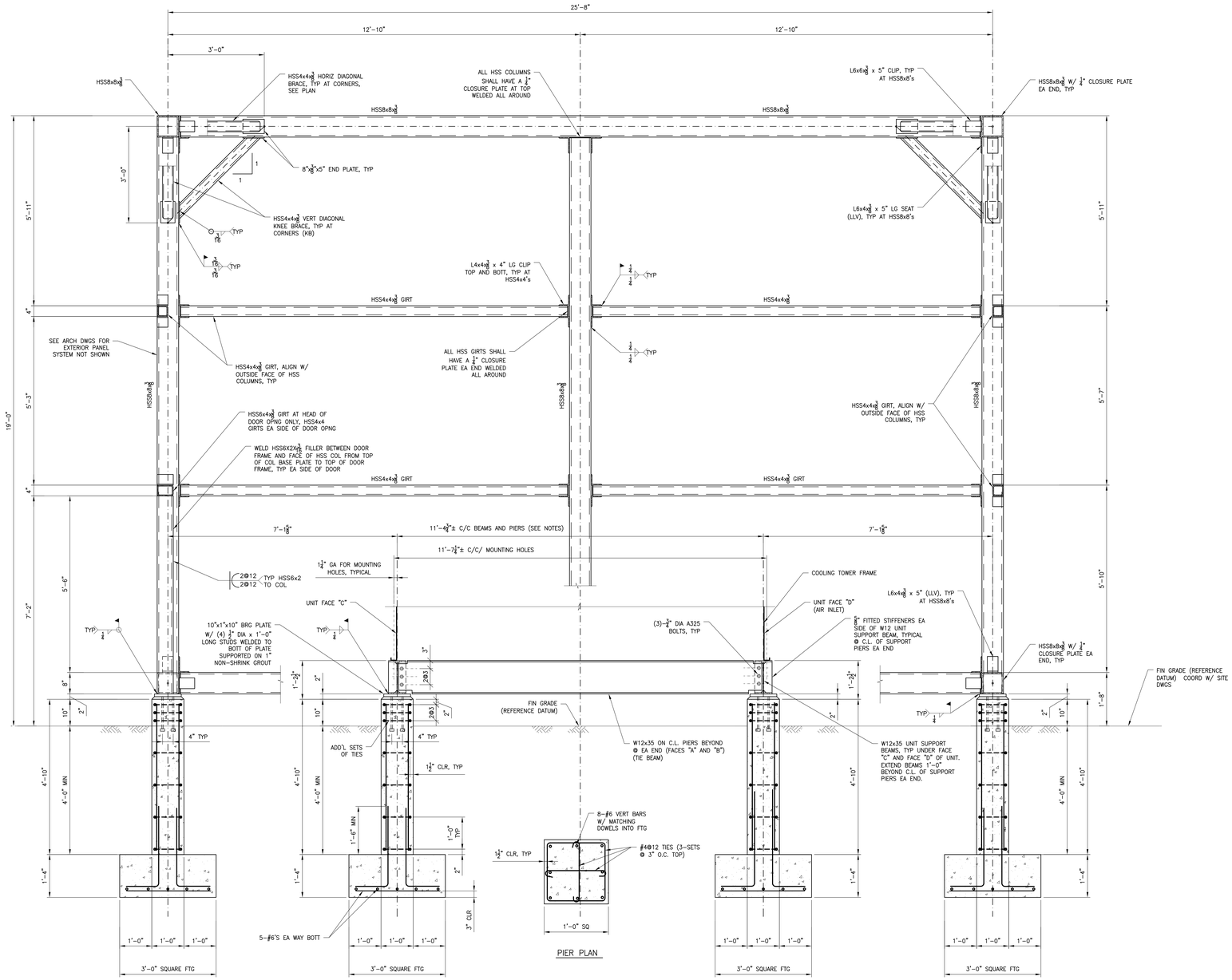
SCIENCE & TECHNOLOGY BUILDING

DRAWING TITLE:

COOLING TOWER– ENCLOSURE AND SUPPORT STRUCTURE PLANS

PROJECT NO: 23000 | DATE: 9/23/2025
PHASE: REBID & CONSTRUCTION | SCALE: AS NOTED

S-1001



A S-1002 SECTION AT COOLING TOWER SUPPORT FRAME AND ENCLOSURE
3/4"=1'-0"

NOTES:
1. ALL ELEVATED FRAMING FOR SUPPORT OF THE COOLING TOWER AND ENCLOSURE SUPPORT FRAMING (INCLUDING, BUT NOT LIMITED TO, COLUMNS, BEAMS, ANGLES, PLATES, CONNECTIONS AND BOLTS) SHALL BE HOT-DIPPED GALVANIZED STEEL. PROVIDE GALVANIZED REPAIR PAINT AT FIELD WELDS AS REQUIRED.

2. INFORMATION SHOWN FOR SUPPORT OF THE COOLING TOWER IS BASED ON PRELIMINARY INFORMATION OBTAINED DURING DESIGN FROM A POTENTIAL VENDOR.
   A. COOLING TOWER BASIS OF DESIGN: BALTIMORE AIRCOIL COMPANY, SERIES 1500 SINGLE CELL UNIT, MODEL S1SE-1212-09 JN COOLING TOWER. MAXIMUM SHIPPING WEIGHT = 9112 POUNDS / MAXIMUM OPERATING WEIGHT = 17822 POUNDS.

3. THE GENERAL CONTRACTOR SHALL COORDINATE ALL DIMENSIONS W/ APPROVED MECHANICAL EQUIPMENT SHOP DRAWINGS PRIOR TO SUBMITTING STRUCTURAL STEEL SHOP DRAWINGS, FABRICATION AND ERECTION.

ONEIDA COUNTY NEW YORK 1798

MVCC
MOHAWK VALLEY COMMUNITY COLLEGE
1101 SHERMAN DRIVE
UTICA, NY 13501
(315) 792-5400

ARCHITECT:
MARCH ASSOCIATES ARCHITECTS & PLANNERS, PC
258 Genesee Street, Suite 300
Utica, New York 13501
315 733 3344

Mitchell Giurgola
Mitchell Giurgola Architects LLP
630 Ninth Avenue, Suite 711
New York, New York 10036
212 663 4000

STRUCTURAL ENGINEER:
Interactive Engineering Solutions, PC
1721 Black River Blvd, Suite L-1
Rome, NY 13440
315 339 7855
IE Solutions
Interactive Engineering Solutions P.C.
Certificate of Authorization No. 0822543
Expiration Date: 11/30/2027

MEP ENGINEER:
Towne Engineering
18 South Street
Utica, NY 13501
315 733 9000

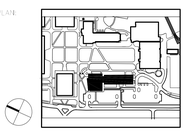
SITE | CIVIL ENGINEER:
Appel Osborne Landscape Architecture
102 West Division Street, Suite 100
Syracuse, NY 13204
315 476 1022

SEAL:
STATE OF NEW YORK DOUGLAS R. CAHILL 61675 LICENSED PROFESSIONAL ENGINEER
Douglas R. Cahill, PE
NYS Professional Engineer No. 61675
Expiration Date 3/31/2026

ISSUE/REVISION:

NO.	DATE	COMMENTS
1	9/23/25	REBID & CONSTRUCTION

COPYRIGHT © 2018 MITCHELL GIURGOLA ARCHITECTS LLP
ALL DRAWINGS, SPECIFICATIONS, CONCEPTS, DESIGNS AND ARRANGEMENTS SHALL REMAIN THE COMMON LAW PROPERTY OF THE ARCHITECT AND SHALL NOT BE USED IN WHOLE OR IN PART FOR ANY PURPOSE WITHOUT THE WRITTEN PERMISSION OF THE ARCHITECT.

KEY PLAN:

PLAN NORTH

PROJECT:
SCIENCE & TECHNOLOGY BUILDING

DRAWING TITLE:
COOLING TOWER– ENCLOSURE AND SUPPORT STRUCTURE SECTIONS AND DETAILS

PROJECT NO: 23000 | DATE: 9/23/2025
PHASE: REBID & CONSTRUCTION | SCALE: AS NOTED

S-1002